PLASSON®
Livestock

PLASSNEST
Installation and Operation Guide

Copyright © 2022 Plasson, all rights reserved.

Rev B | Doc P/N: 080205034E

Global Presence - Local Commitment

Feeding Drinking Climate Housing

Table Of Contents

1. Safety

This chapter contains an overview of the Plassnest system safety concerns and includes:

- Safety Overview
- Safety Conventions
- Cautions and Warnings
- Storage, Transport, and Installation
- EMC Safety

1.1 Safety Overview

Plasson's Plassnest system has been designed to meet all known safety requirements. During normal operation, the Plassnest system presents no hazards to the operator or other personnel. However, in certain circumstances, the following potential hazards to operators and maintenance team personnel exist:

- Electrical shock (220 VAC)
- Mechanical hazard (moving parts, pinch points, etc.)
- Overhead hazard
- Heavy object hazard

The information and instructions presented in this document are intended to help personnel work with the Plassnest system in a safe, effective, and efficient manner.

1.2 Safety Conventions

Safety information is presented as follows:

CAUTION
Caution is the signal word used to indicate a potentially hazardous situation which, if not avoided, could result in minor or moderate injury. It may also be used alert against unsafe practices.

WARNING
Warning is the signal word used to indicate a potentially hazardous situation which, if not avoided, could result in death or severe injury.

DANGER
Danger is the signal word used to indicate an imminently hazardous situation which, if not avoided, will result in death or severe injury. This signal word is limited to the most extreme situations.

1.3 Cautions and Warnings

The following instructions and guidelines are necessary to ensure safe operation and long system life. Before performing any work on the system, become familiar with the following safety sections:

1.3.1 General Safety Cautions

⚠ CAUTION

- Read the installation and operation instructions prior to installing or before servicing the system.
- Before working on the system, read all safety standards and instructions to avoid injury or damage to equipment or property.
- Electrical connections must be serviced by a qualified electrician, using certified components only, and according to local regulations and standards.
- Shut off the system before conducting system maintenance.
- Proper operation of the system is not guaranteed if unauthorized parts are used.
- Clean up spills and leaks immediately.
- In case of unusual or irregular noise or vibration, it is necessary to switch off the system.

⚠ CAUTION

- Follow operation instructions and maintenance procedures to prevent mineral and scale build-up.
- Follow operation instructions and maintenance procedures to prevent algae growth on wet surfaces.
- DO NOT use water containing chlorine as it will cause corrosion.
- DO NOT use water containing chlorides content higher than 200 mg/L as it will cause corrosion.

1.3.2 General Warnings

WARNING

- **Hazardous Voltage:** Contact with electrical equipment can cause electric shock or burn if the power supply is turned on. Before starting any work on electrical equipment, disconnect the machine from the power socket.

1.4 Storage, Transport, and Installation

CAUTION

Storage safety:

- Ambient temperature must be between 5°C and 60°C.
- System must not be exposed to humidity, rain, condensation, dust, or direct sunlight during storage.

Transport safety:

- Move the system using appropriate lifting equipment.
- Avoid heavy vibration during transport.
- ???

CAUTION

Installation safety:

- The operator is responsible for the equipment and must not allow unauthorized persons to use the system or be in its vicinity.
- Whenever you handle or repair the equipment, turn off the power supply first.
- Maintenance and repairs must be carried out by qualified technicians authorized by Plasson.
- Always use Plasson components when replacing any defective components.
- All electrical parts must be grounded and installed by a qualified electrician.
- Pay close attention to the safety symbols on the components, as carelessness can lead to serious injury and even death.

1.5 EMC Safety

All Plassnest system components comply with IEC EN 61000-6-3, the emission standard for residential, commercial, and light industrial environments.

2. Introduction

This chapter introduces the Plassnest system and includes:

- System Concept
- System Overview
- Nest Modules (Single/Double)
- Expulsion Sub-system
- Egg Collection Conveyor Belt Sub-system
- Nest Suspension Sub-system
- Power and Control System Overview
- Optional Layouts
- Typical Installation Workflow

2.1 System Concept

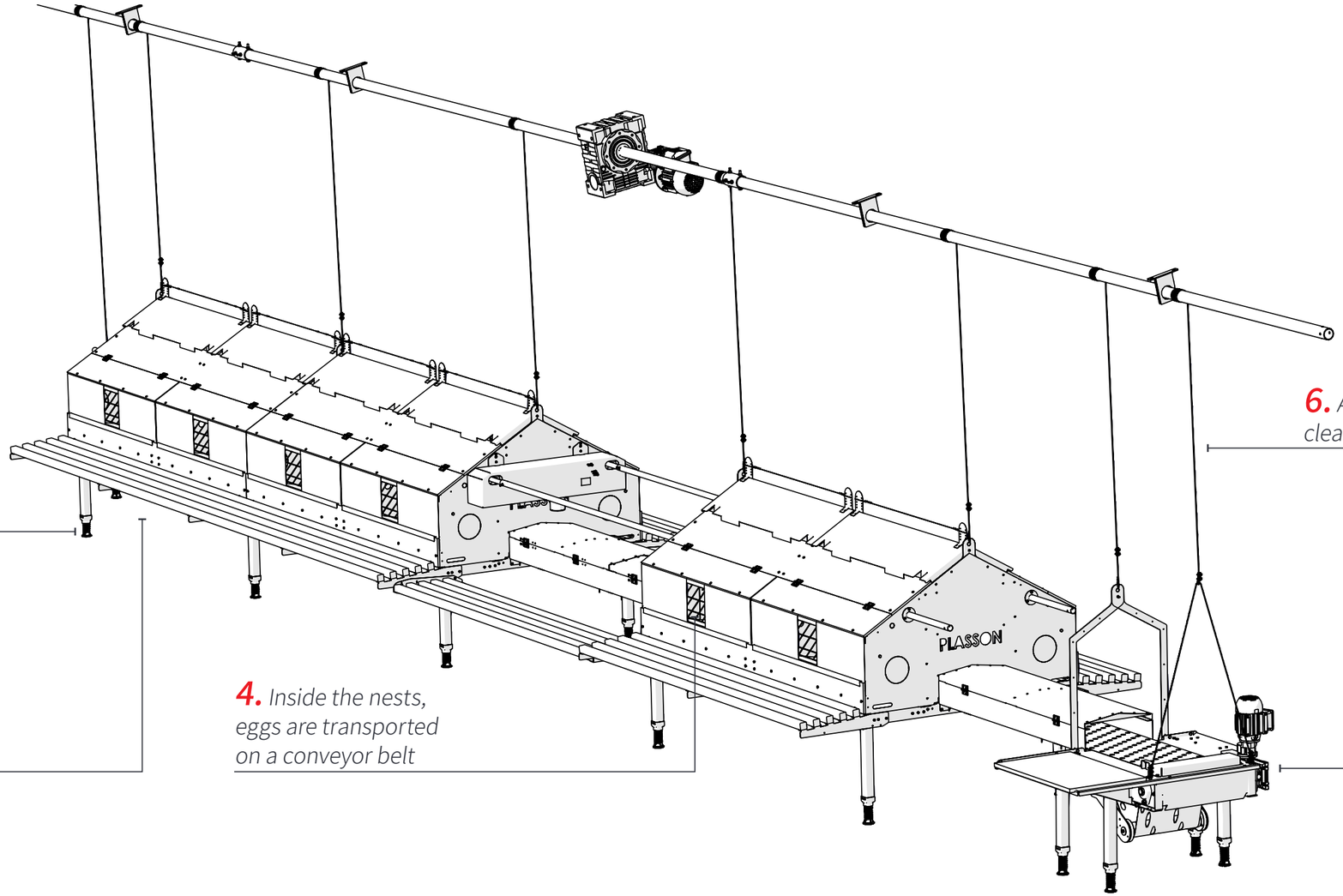

1. *Hens roam freely all over the chicken house floor*

2. *During the hen training period, legs are folded and the nests are placed on the floor*

3. *Hens make use of benches for easy access to the nests, as well as a place to perch*

4. *Inside the nests, eggs are transported on a conveyor belt*

5. *Eggs are transported to a collection table, where they are hand-collected*

6. *A suspension system allows for easy cleaning of the chicken house floor*

2.2 System Overview

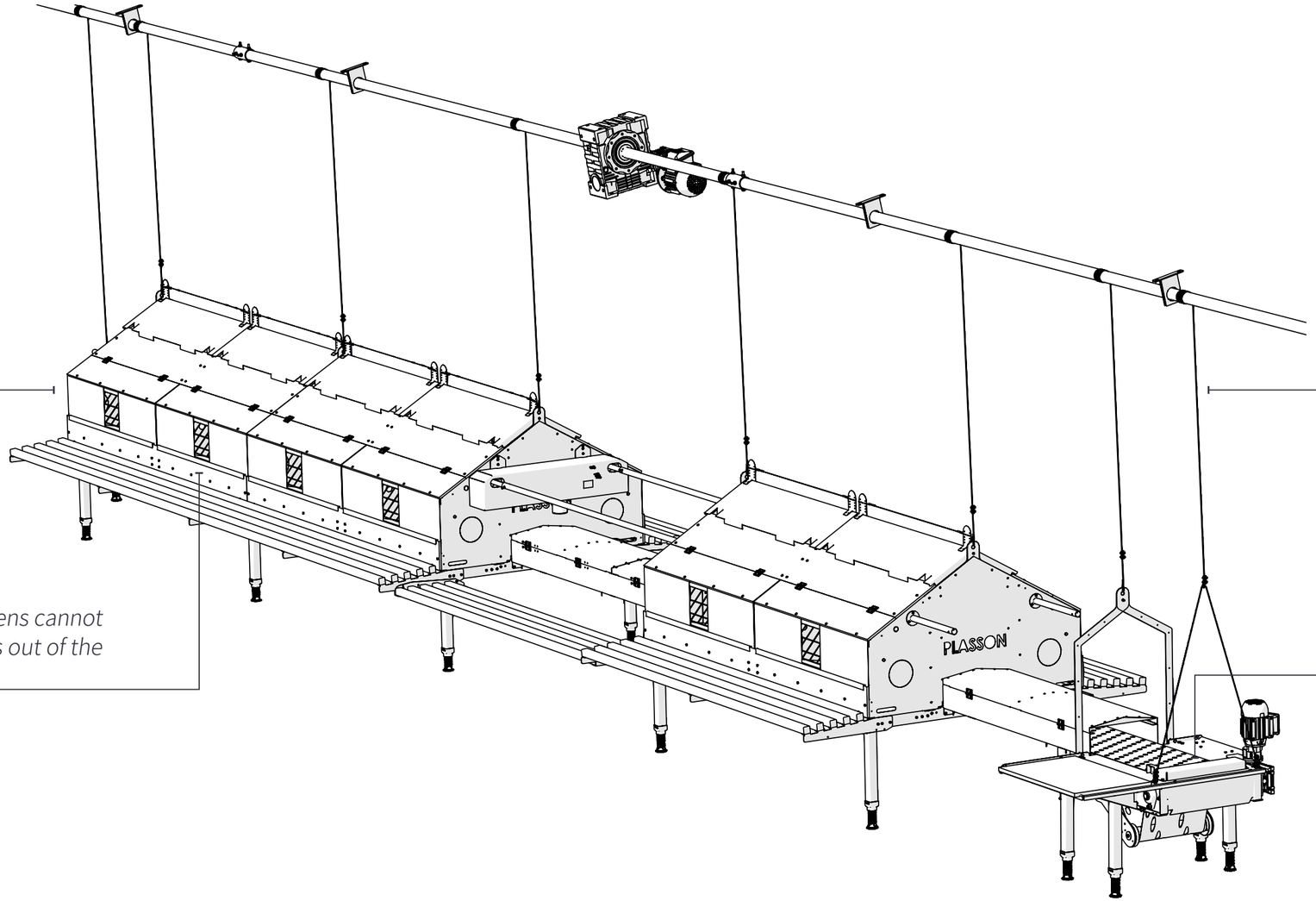

Nest Modules (Single/Double) – provide a dark, spacious, and well-ventilated environment for hens to lay their eggs

Nest Suspension Sub-system – lifts the entire system off the ground, allowing for cleaning of the floor and folding of the legs

Expulsion Sub-system – ensures hens cannot retrieve their eggs, and forces hens out of the nests when it's time to roost

Egg Collection Conveyor Belt Sub-system – transports eggs to a collection table

2.3 Nest Modules (Single/Double)

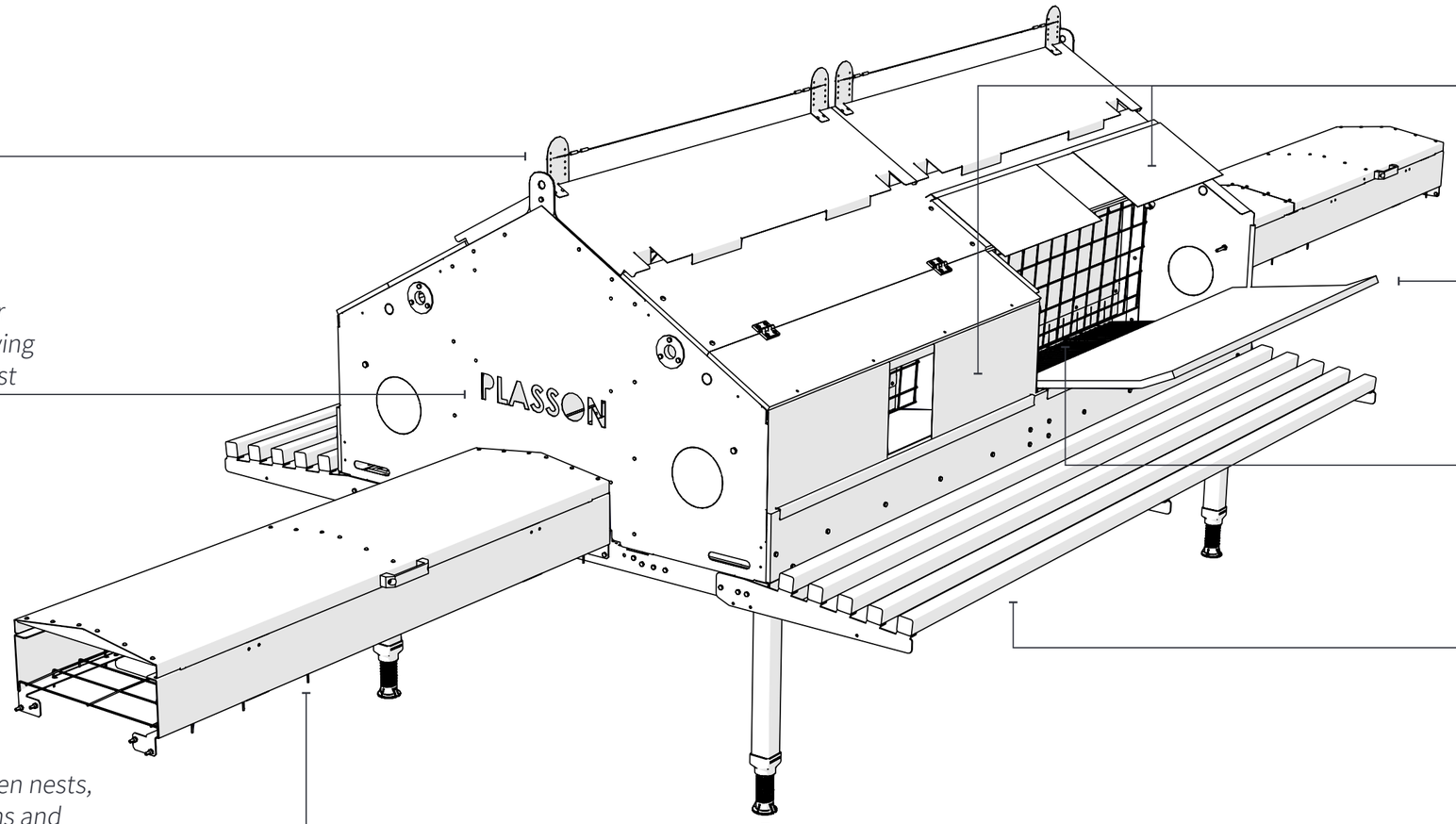

Opaque covers enable a dark nest interior, and they fold up for easy access to the interior during cleaning

Anti-perch cables ensure hens do not perch on the nest roofs

Floor mats are removable, allowing for easier cleaning

Plasson logos located on either side of the nest are open, allowing for better air flow inside the nest

Spacious interior ensures the hens have plenty of room to move

Benches assist the hens in entering the nest

Passages allow for gaps between nests, enabling free movement of hens and better airflow in the chicken house

Foldable legs enable the nests to rest on the ground during the training period

The double nest module provides the same environment for hens as the single nest module. Double nest modules allow for more nesting space in longer breeder houses.

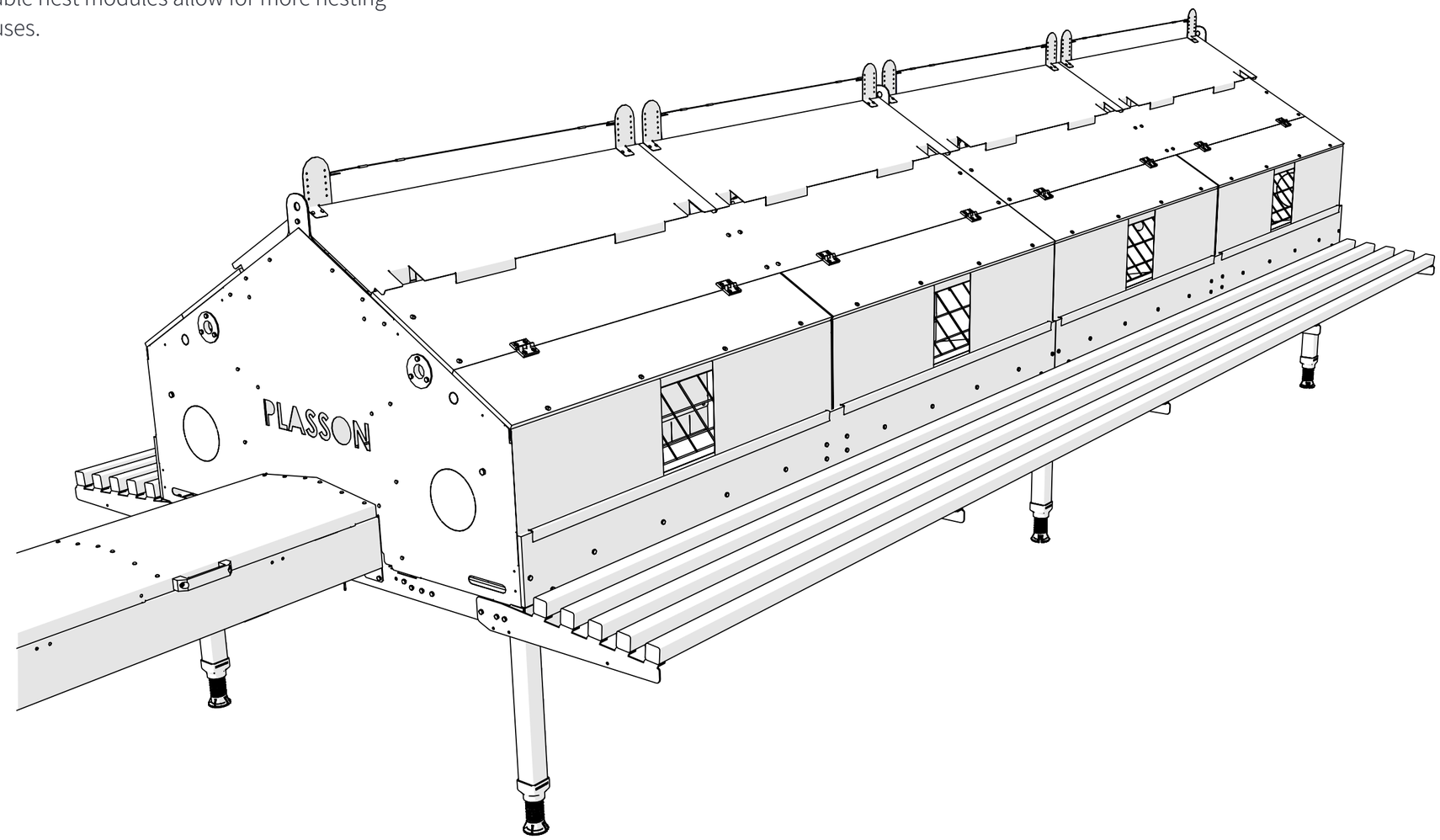

2.4 Expulsion Sub-system

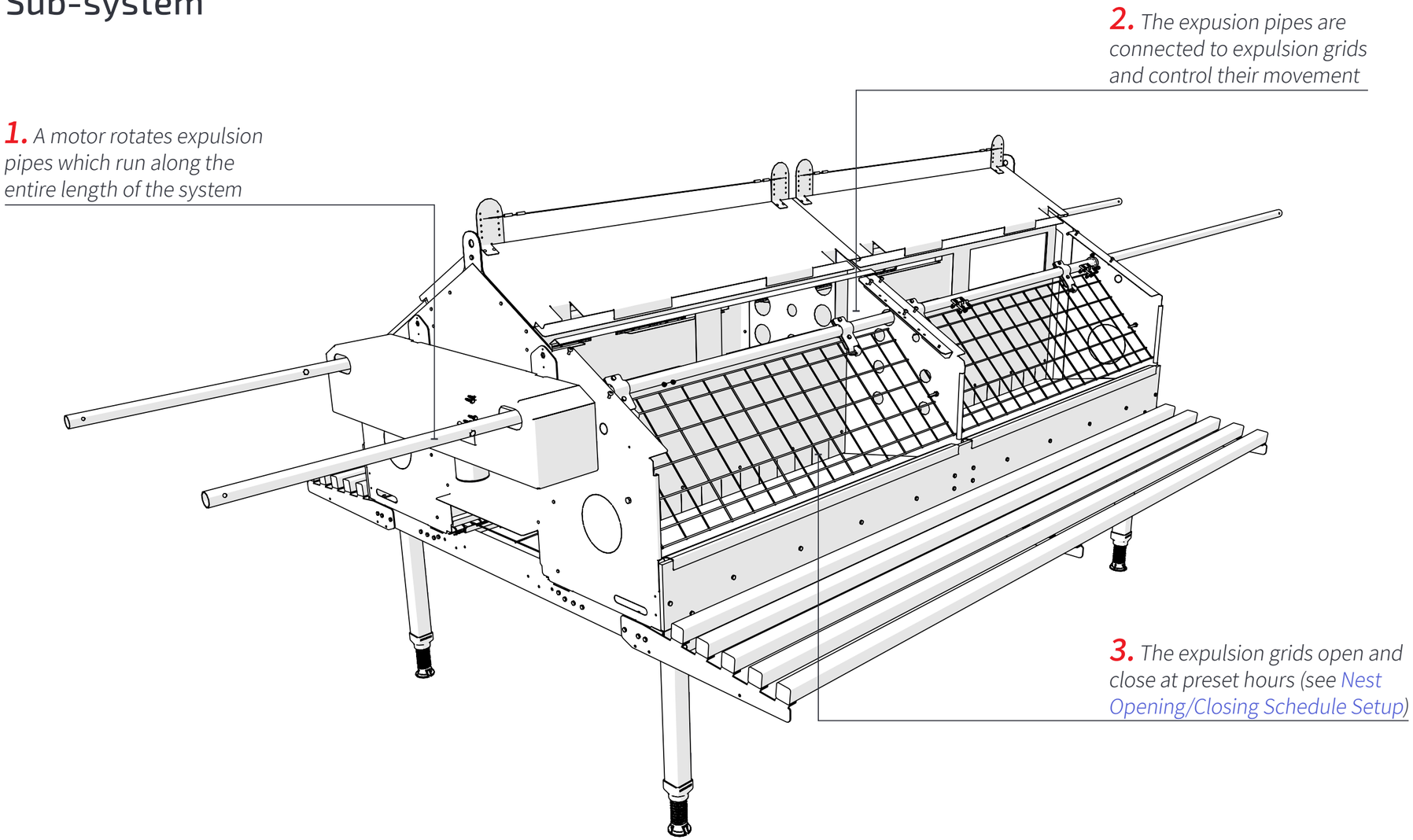

2.5 Egg Collection Conveyor Belt Sub-system

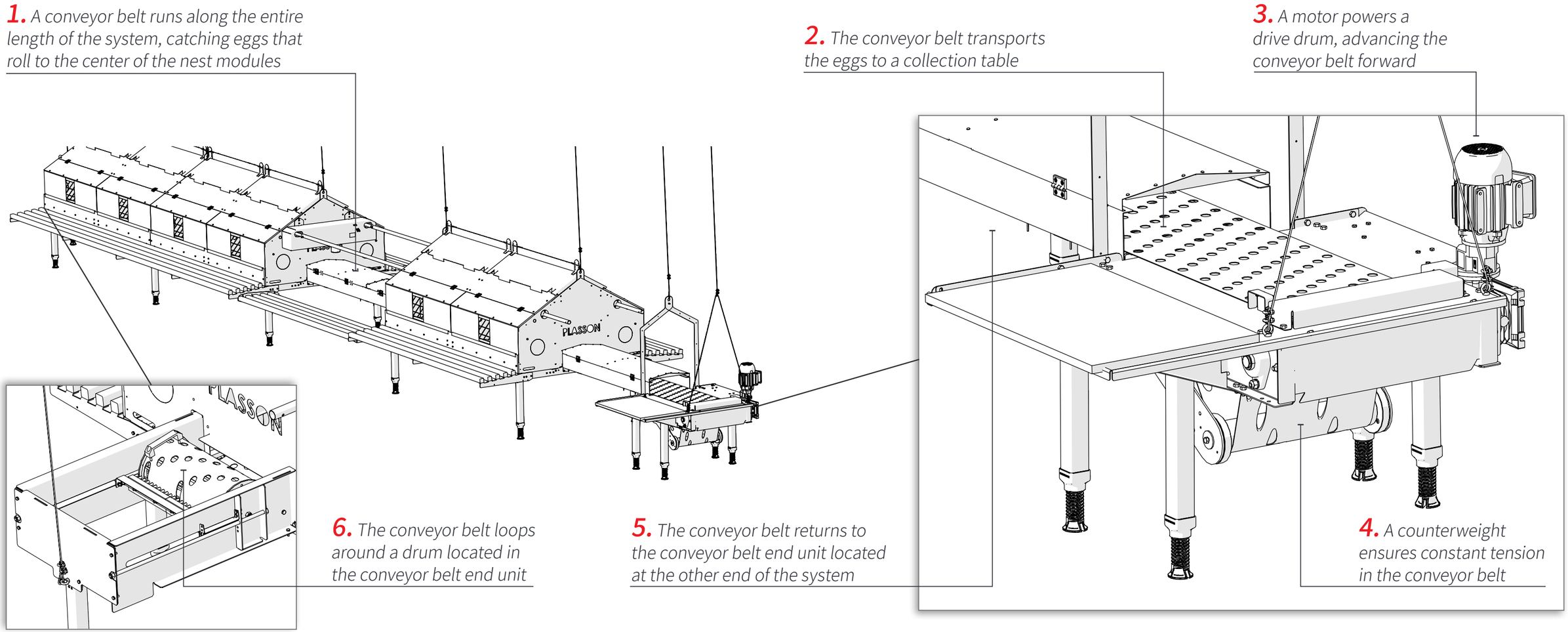

2.6 Nest Suspension Sub-system

1. One end of the suspension wire is wrapped around a common axle

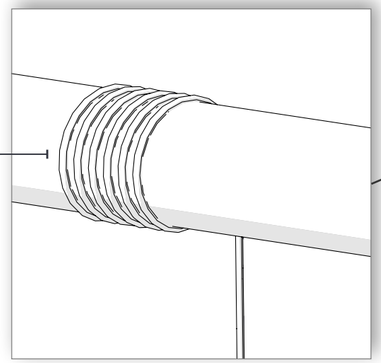

2. The second end of the suspension wire is connected to the suspension frame

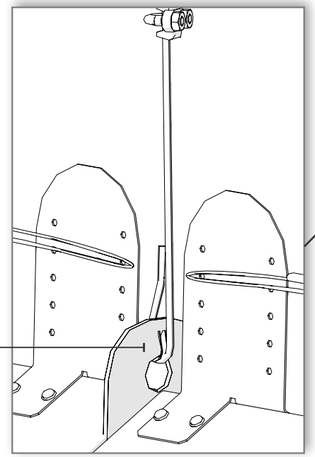

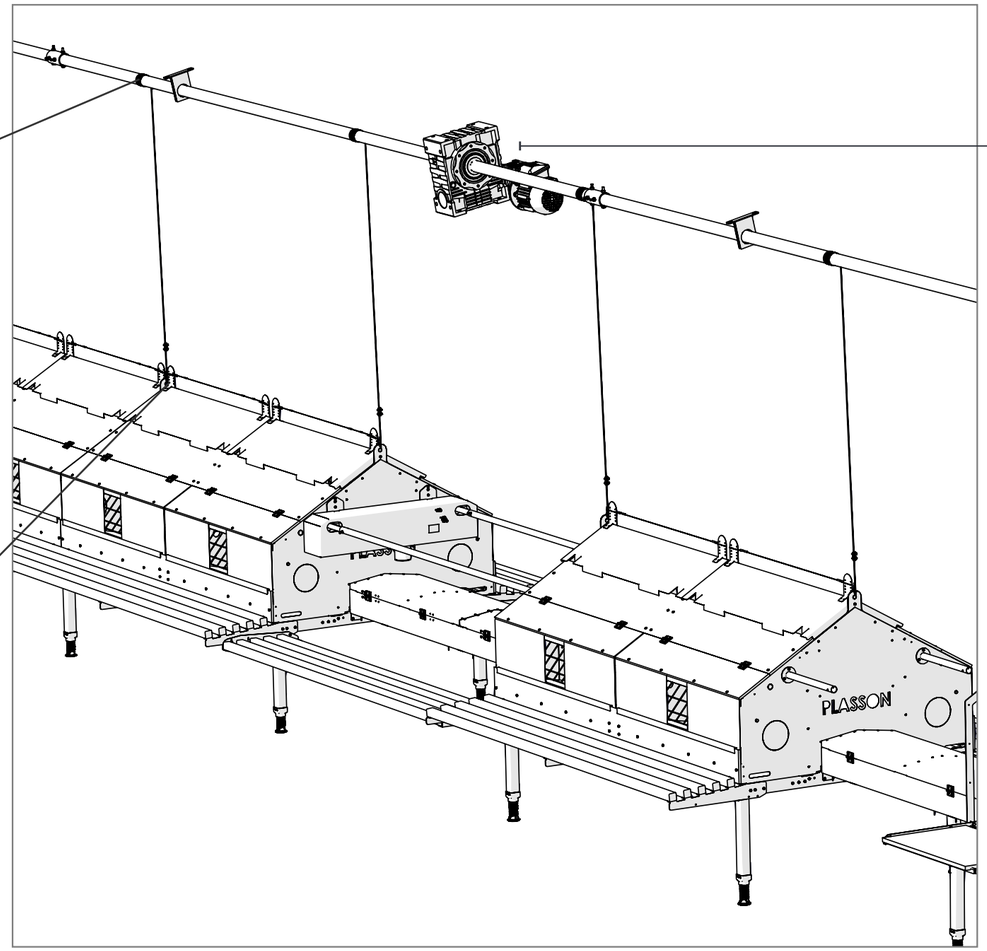

3. A drive unit attached to the building's rafter tie rotates the common axle, raising and lowering the entire system

2.7 Power and Control System Overview

Main Control Cabinet

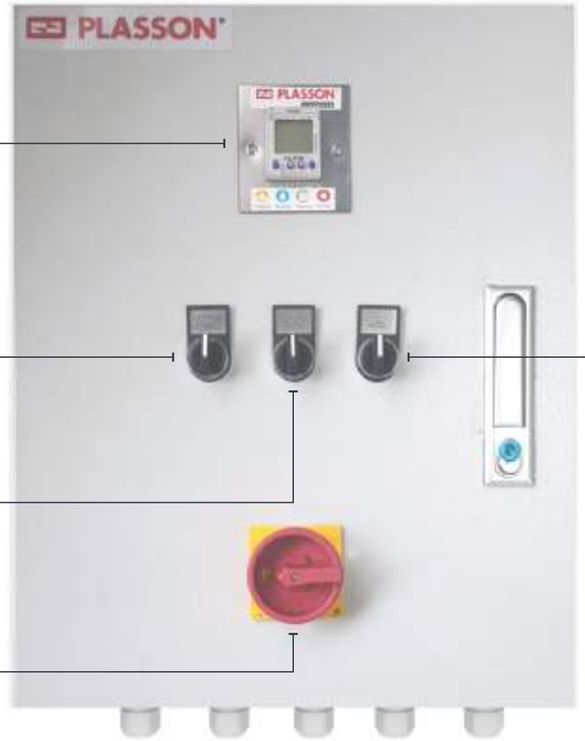

Expulsion system timer *– sets the times of the day when the expulsion system opens and closes (see Nest Opening/Closing Schedule Setup)*

Expulsion mode switch *– enables opening and closing of the expulsion system to be controlled automatically via the timer (**Auto**) or manually via the Expulsion Movement switch (**Manual**)*

Expulsion movement switch *– enables manually opening (**Open**) and closing (**Close**) the expulsion system*

Main power switch

Conveyor belt control buttons *– control the speed of the converyor belt (see Running the Egg Collection Conveyor Belt)*

Converyor belt emergency stop button *– immediately stops conveyor belt movement*

Converyor belt control switch *– enables conveyor belt movement to be controlled via the remote (**1**)*

Conveyor Remote Control

Proximity sensor *– stops the conveyor belt when it senses that an egg has reached the end of the collection table*

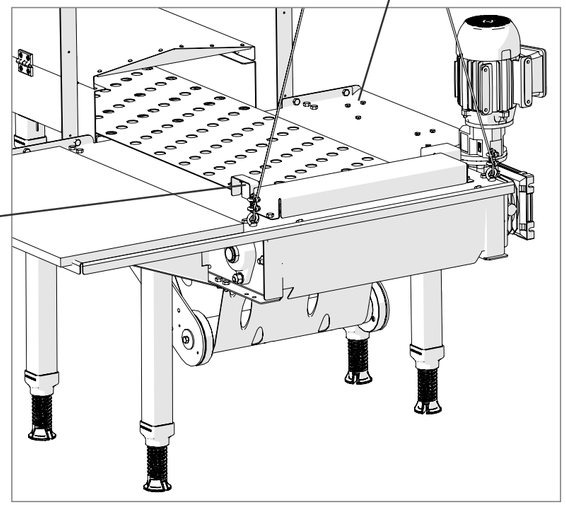

NOTE:
Setting switches to **0** disables their functionality

2.8 Optional Layouts

PlassNest layouts depend on the dimensions of the chicken house, the service area, and the number of layers and breeders. The following are three examples of PlassNest layouts:

- Breeder House – All In All Out
- Free Range Commercial Layer House
- Heavy Breeders House

2.8.1 Breeder House – All In All Out

Location – Philippines
Length – 126 m
Width – 15.5 m

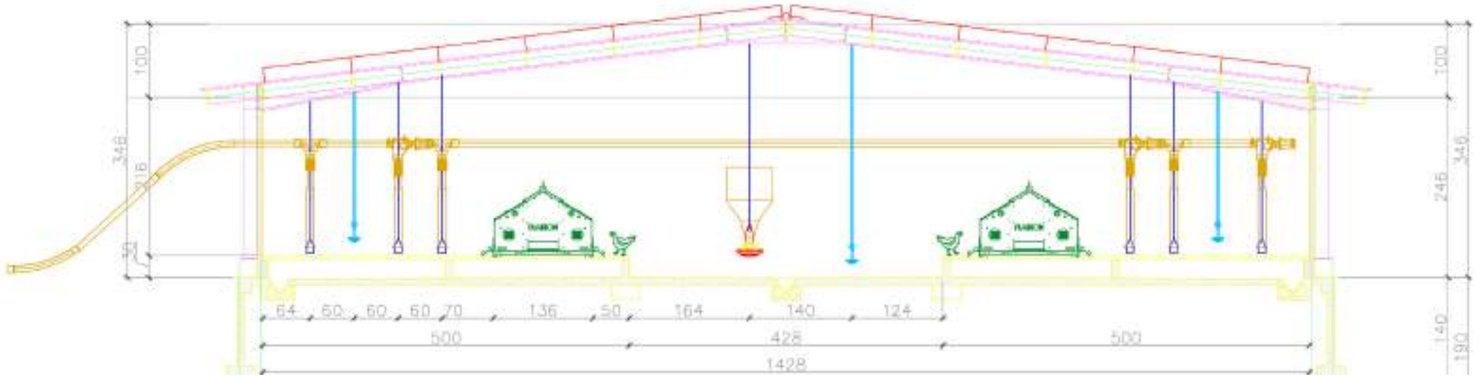

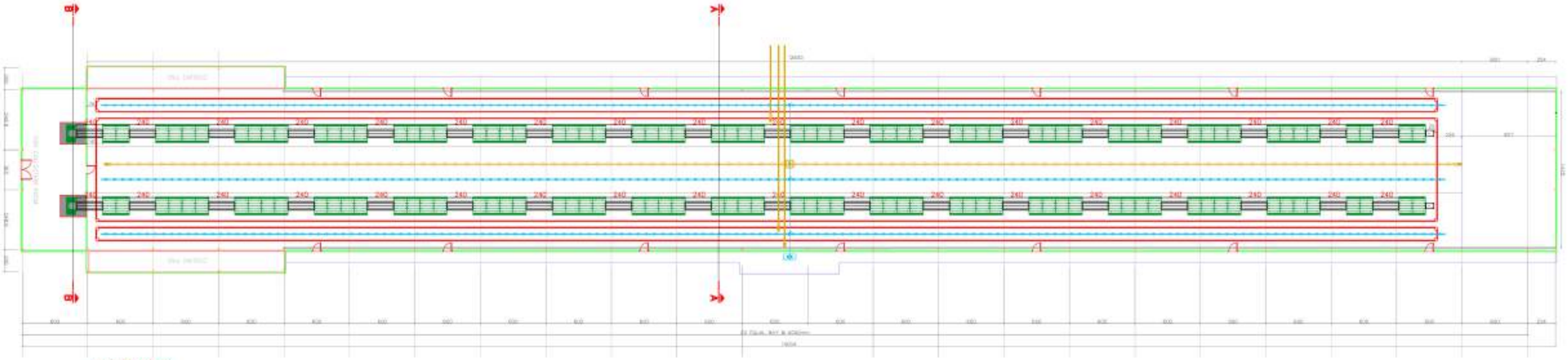

FLOOR PLAN
1:200

2.8.2 Free Range Commercial Layer House

Location – France
Length – 100 m
Width – 15 m

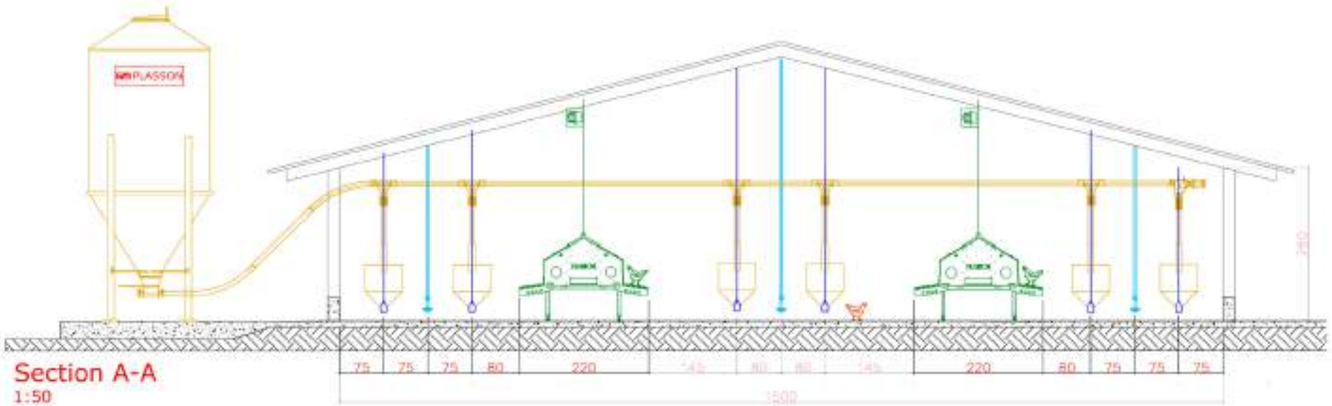

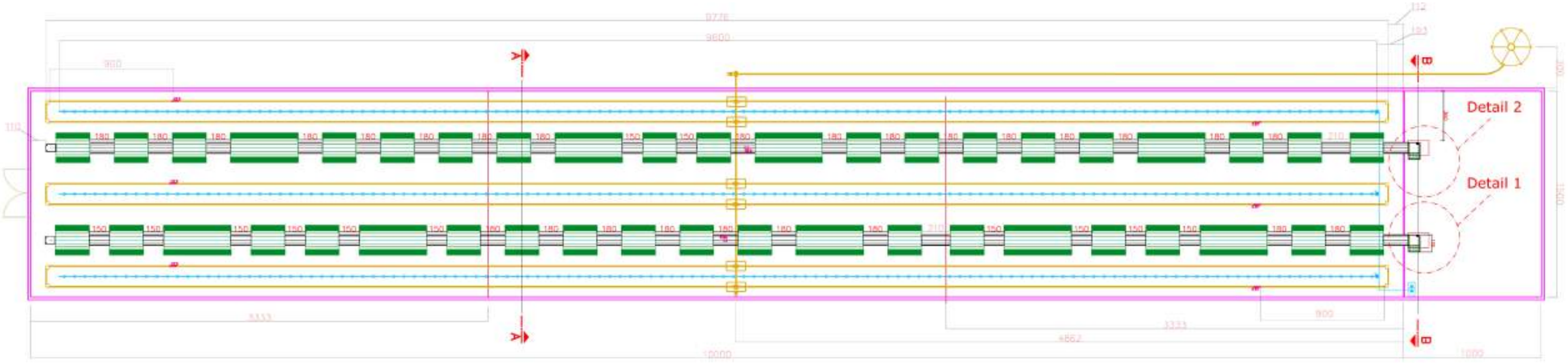

2.8.3 Heavy Breeders House

Location – Israel
Length – 150+13 m
Width – 15.5 m

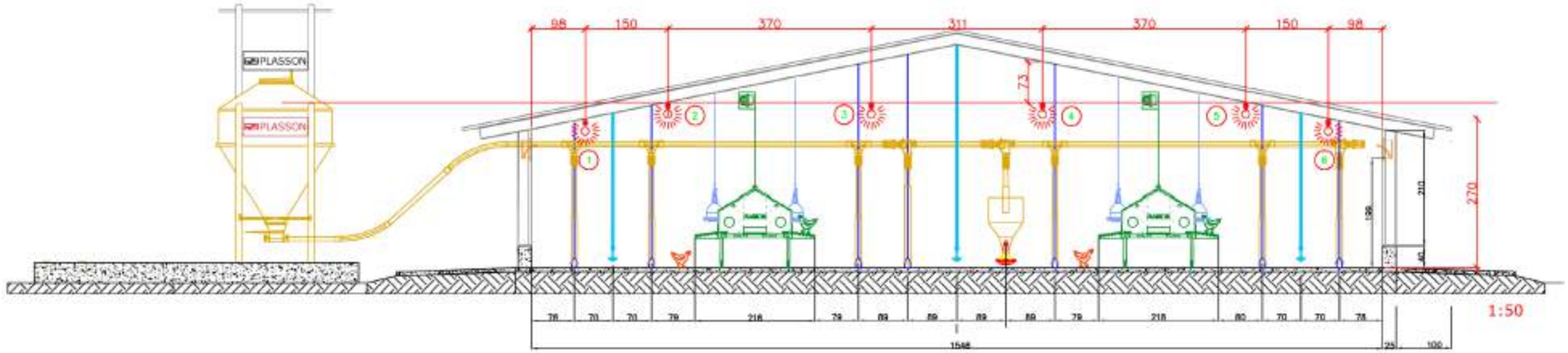

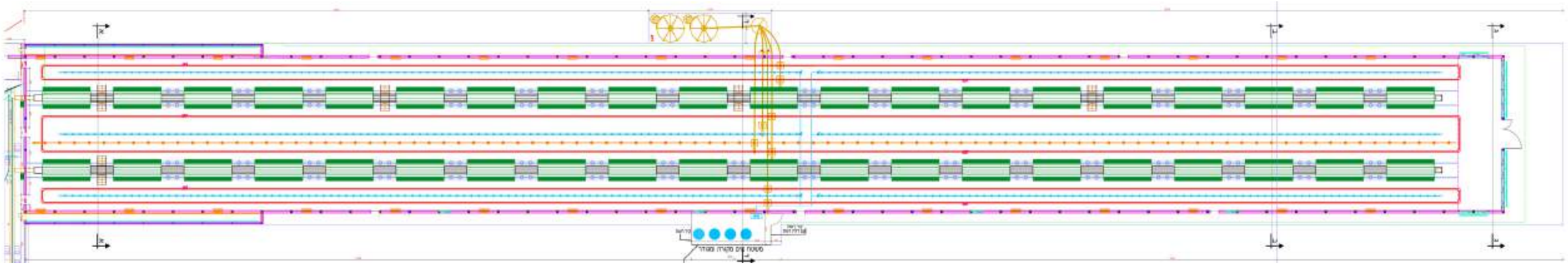

2.9 Typical Installation Workflow

The typical nest installation workflow is as follows:

1. Mark the location of the nest closest to the collection table, using the designed layout as a guide.
2. Measure and mark the locations of the rest of the nests.
3. Verify there are no conflicts with structural elements of the house (e.g., ensure that the suspension pipe bearings attached to the rafters are not directly over the suspension frames of the nests).
4. Verify there are no conflicts with the other systems in the house (i.e., with the cable troughs, the cross auger feeding line, etc.)
5. Follow the Assembly Instructions.

3. Installation

This chapter reviews the tasks associated with installing the Plassnest system and includes:

- Preparations for Installation
- System Unpacking
- Assembly Instructions
- Power and Control Connections
- Nest Opening/Closing Schedule Setup
- Bill of Materials (BOM)

3.1 Preparations for Installation

This chapter details requirements that must be fulfilled before beginning the installation process and includes:

- Installation Requirements
- Required Tools and Labor

3.1.1 Installation Requirements

Before installing the PlassNest system, ensure the following:

- All construction on the chicken house has been completed.
- The installation site is free from debris.
- Electric power for the suspension system, expulsion system, and conveyor belt is set up and ready to be connected (see Power and Control Connections)

3.1.2 Required Tools and Labor

Standard Tools

- Two sets of metric open-end wrenches (8, 10, 13, 17, and 19 mm)
- One set of metric ring wrenches (8, 10, 13, 17, and 19 mm)
- One set of metric socket wrenches (8, 10, 13, 17, and 19 mm)
- Two sets of Allen keys
- Screwdrivers (flat and Phillips)
- Pliers
- Plier clamps
- Hammers (rubber, plastic, and metal heads)
- Utility knife
- Scissors

Power Tools

- Two drills
- Drill bits for metal (3 to 12.5 mm)
- Drill driver
  NOTE: Must be non-impact
- Angle grinder
- Pop rivet gun (electric or pneumatic)
  NOTE: Need compressed air supply if pneumatic gun is used

Electricians Tools

- Standard electrician tools

3.2 System Unpacking

Open the system package and verify that all the parts listed in the Bill of Materials (BOM) are located in the package and are intact. If any part is missing or damaged, contact Plasson.

NOTE:
Unpack the system in a clean and dry area.

3.3 Assembly Instructions

This section reviews the steps required to assemble the system and includes:

Step 1: Installing the Nest Suspension Drive Unit

1. *Weld the drive unit plate (78) to the center roof beam*

NOTE:
The center of the drive unit plate circle must be 100 mm (± 2 mm) from the bottom of the beam

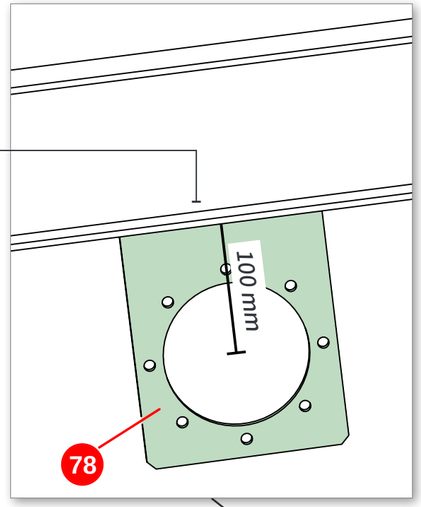

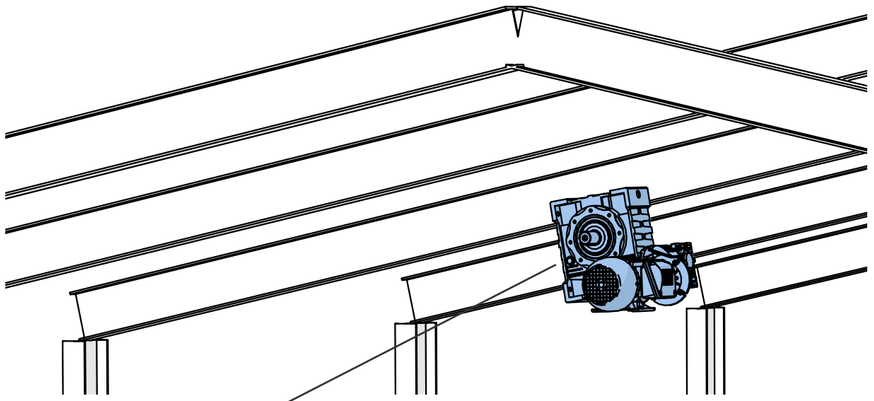

2. *Attach the nest suspension drive unit (80) to the drive unit plate*

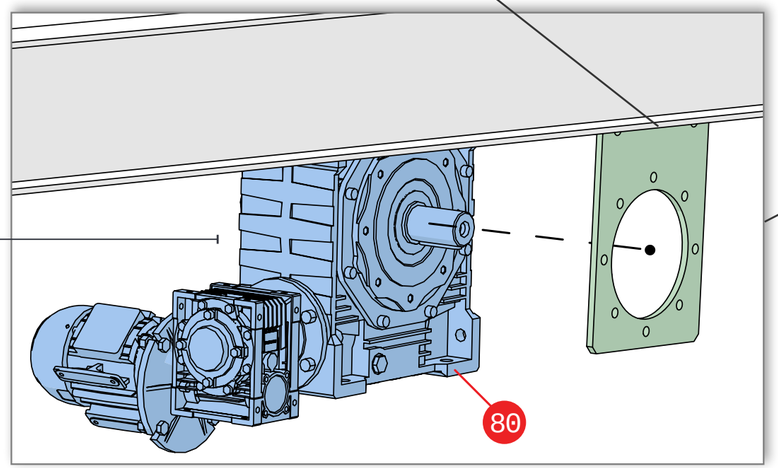

NOTE:
Install the drive unit in the middle of the chicken house. If a nest line has two expulsion systems, install the drive unit between the two systems. See Optional Layouts for more details on suspension system layout.

Step 2: Installing the Suspension Pipe Bearings

Attach the suspension pipe bearings (53) to the roof beams using two screws (33) and two nuts (4)

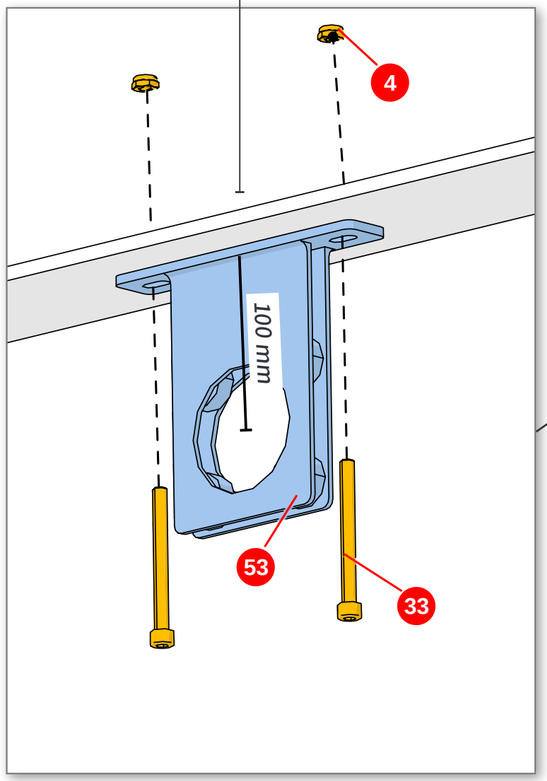

NOTE:
The center of the bearing circle must be 100 mm (± 2 mm) from the bottom of the beam

NOTE:
The distance between bearings should be 3 meters or less. For longer distances consult a Plasson representative

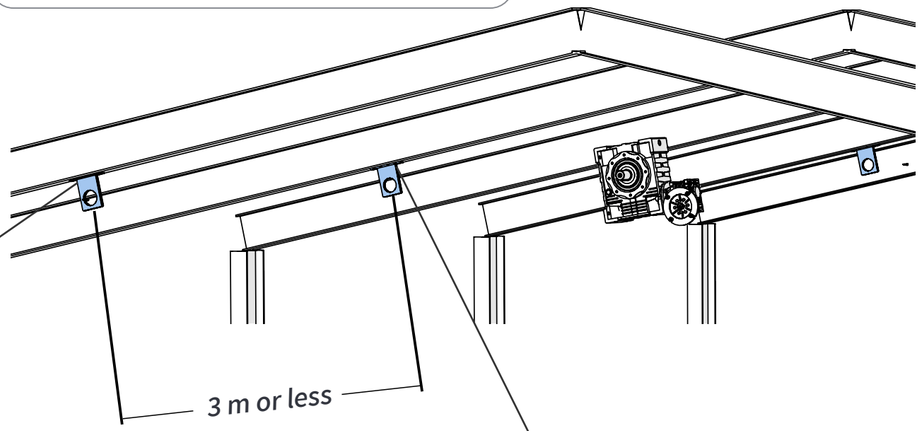

NOTE:
Tolerance between bearings:
- Horizontal: 2 mm
- Vertical: 5 mm

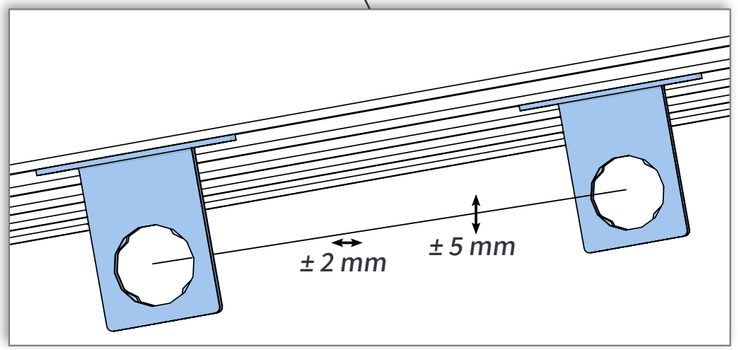

Step 3: Installing the Suspension Pipes

1. Insert the suspension pipes (54) into the bearings

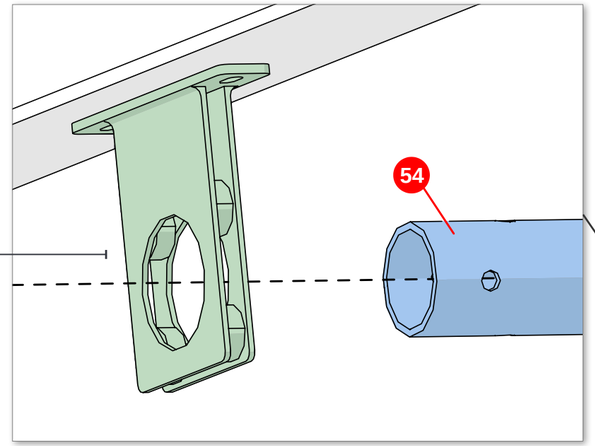

2. Attach the suspension pipes to the drive unit

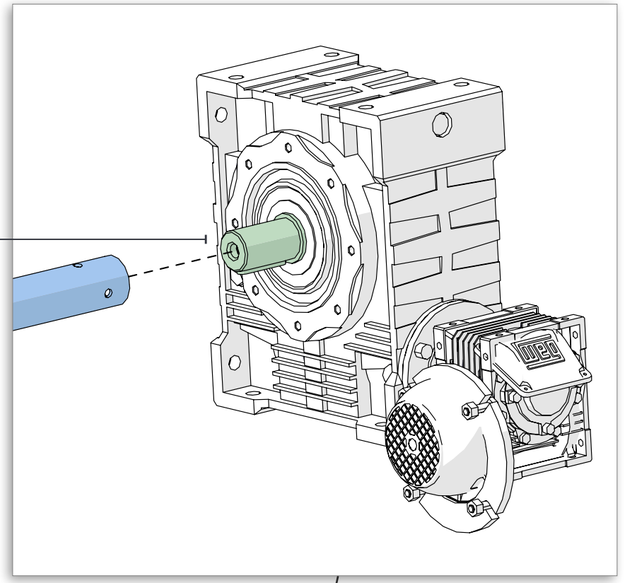

3. Connect suspension pipes to each other using a pipe adapter (55), four screws (56), and four nuts (57)

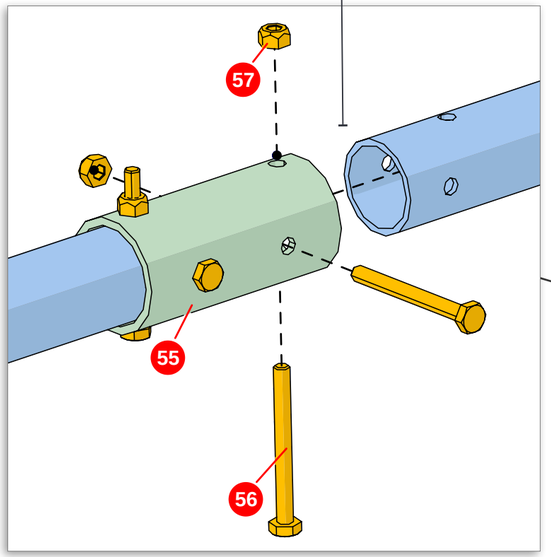

NOTE:

If there are more than 20 nests, connect pipes using a chain coupler (79) instead of a pipe adapter

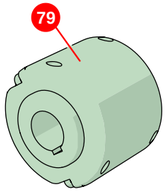

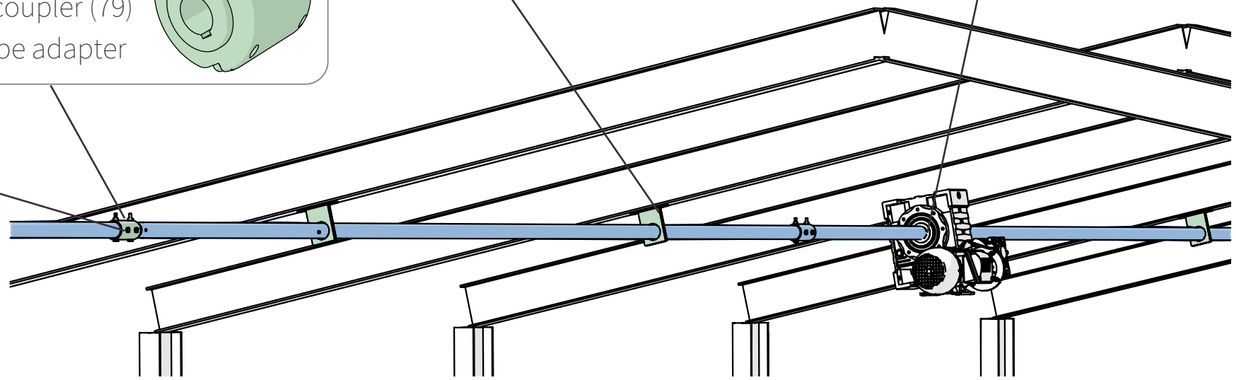

Step 4: Assembling the Nest Bases

NOTE:
If the base comes pre-assembled, start with step 3 on the next page

1. Attach three short beams (83) to two long beams (84) using twelve self-drilling screws (36)

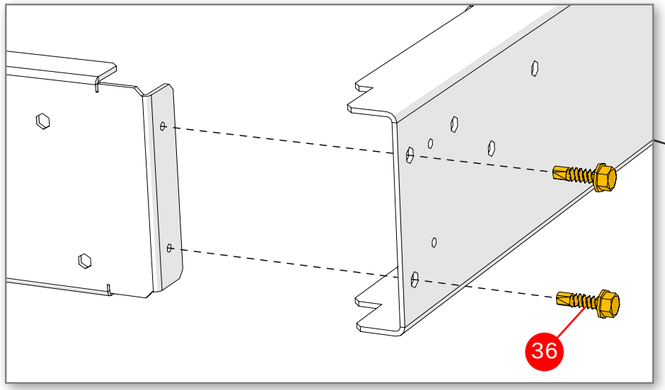

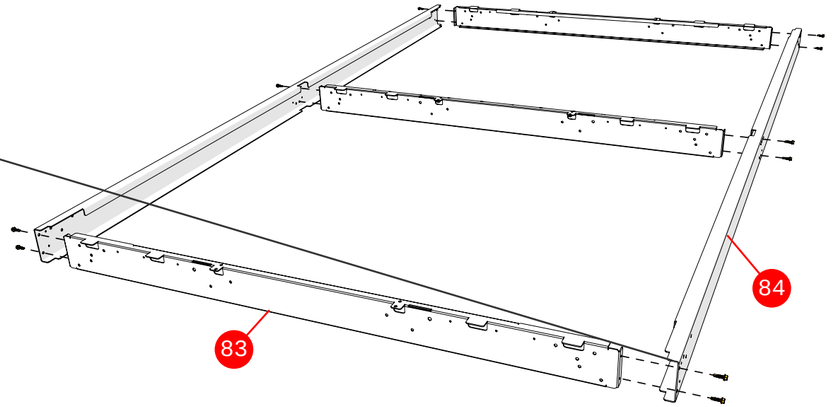

2. Attach four corner triangles (9) to the beams using six self-drilling screws (36) per corner triangle

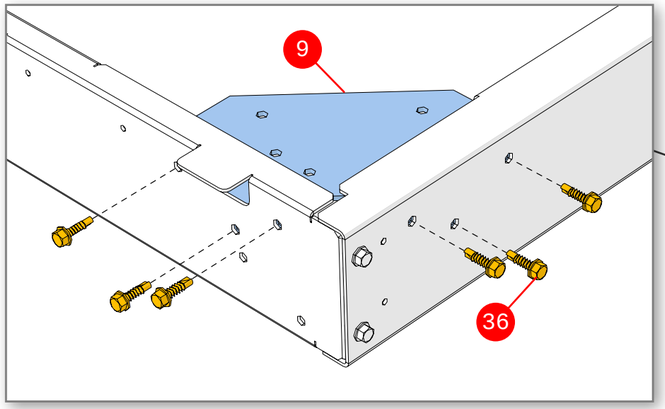

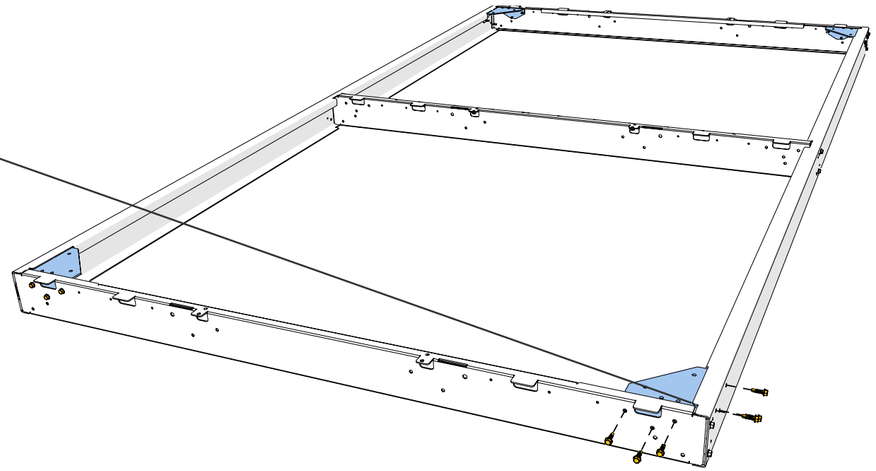

3. *Attach legs (39) to the corner triangles using three self-drilling screws (36) per leg*

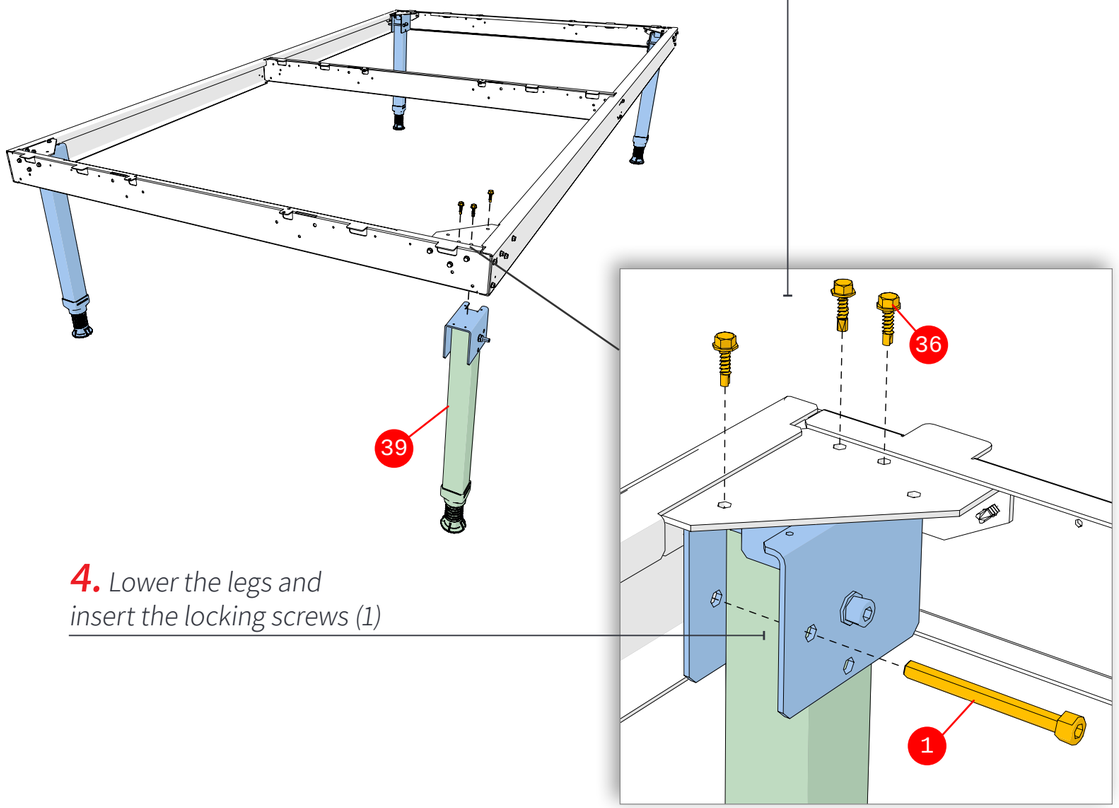

4. *Lower the legs and insert the locking screws (1)*

Reverse angle

5. *Attach two middle profiles (7) to the short beams using three screws (2) and three nuts (5) per profile*

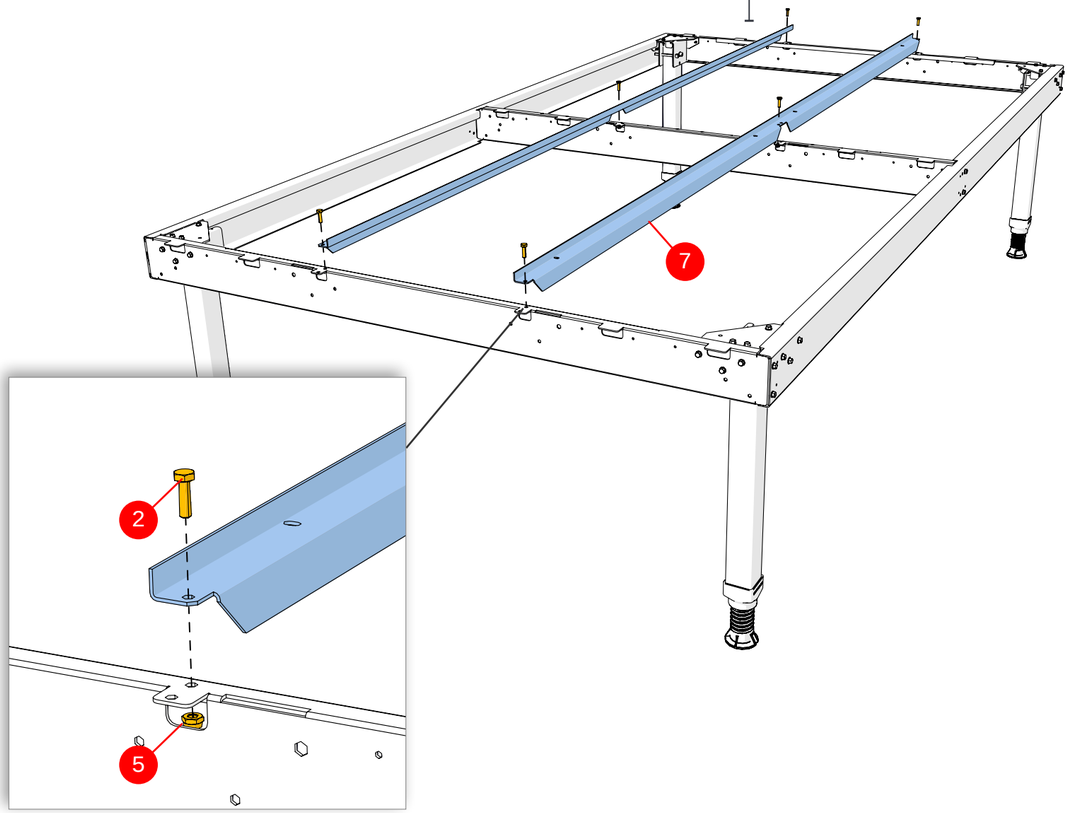

6. *Insert two suspension frames (15) into the slits located at each end of the nest base*

7. *Connect the two suspension structure frames together using one screw (2) and one nut (5)*

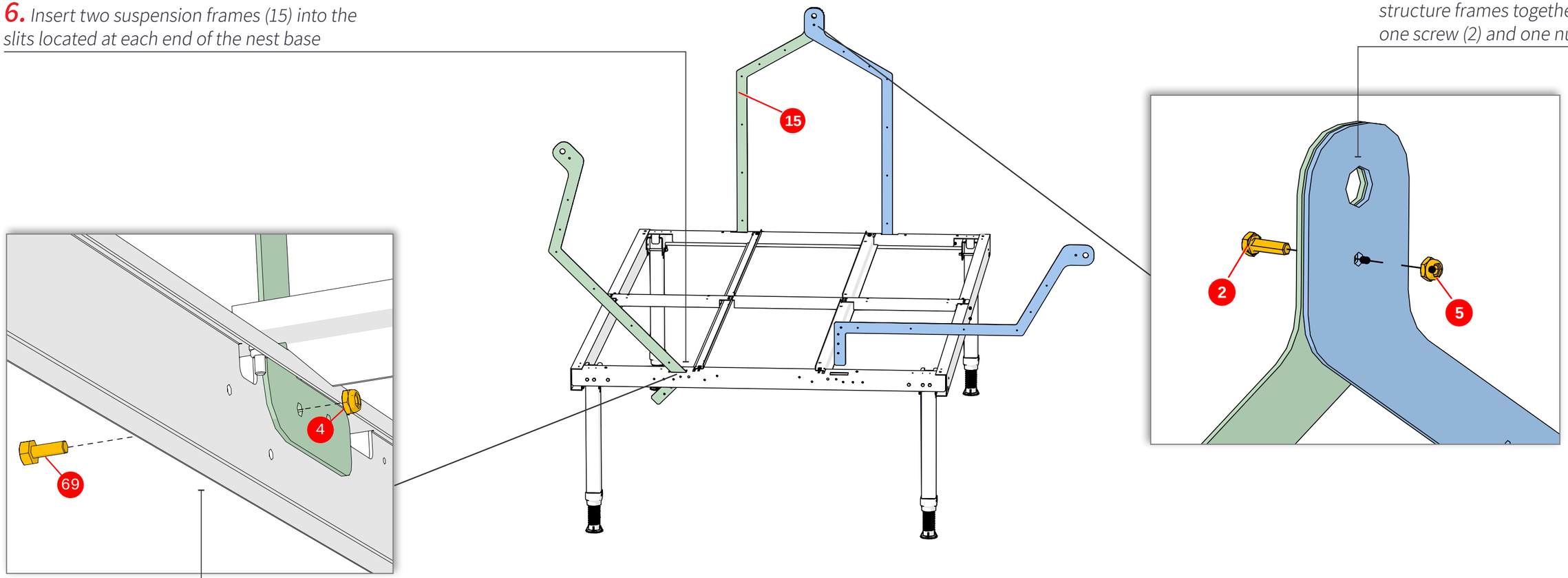

Inside view

8. *Attach each suspension frame to the nest base using one screw (69) and one nut (4)*

Assembling the Nest Line

Assemble the nest line in the following order:

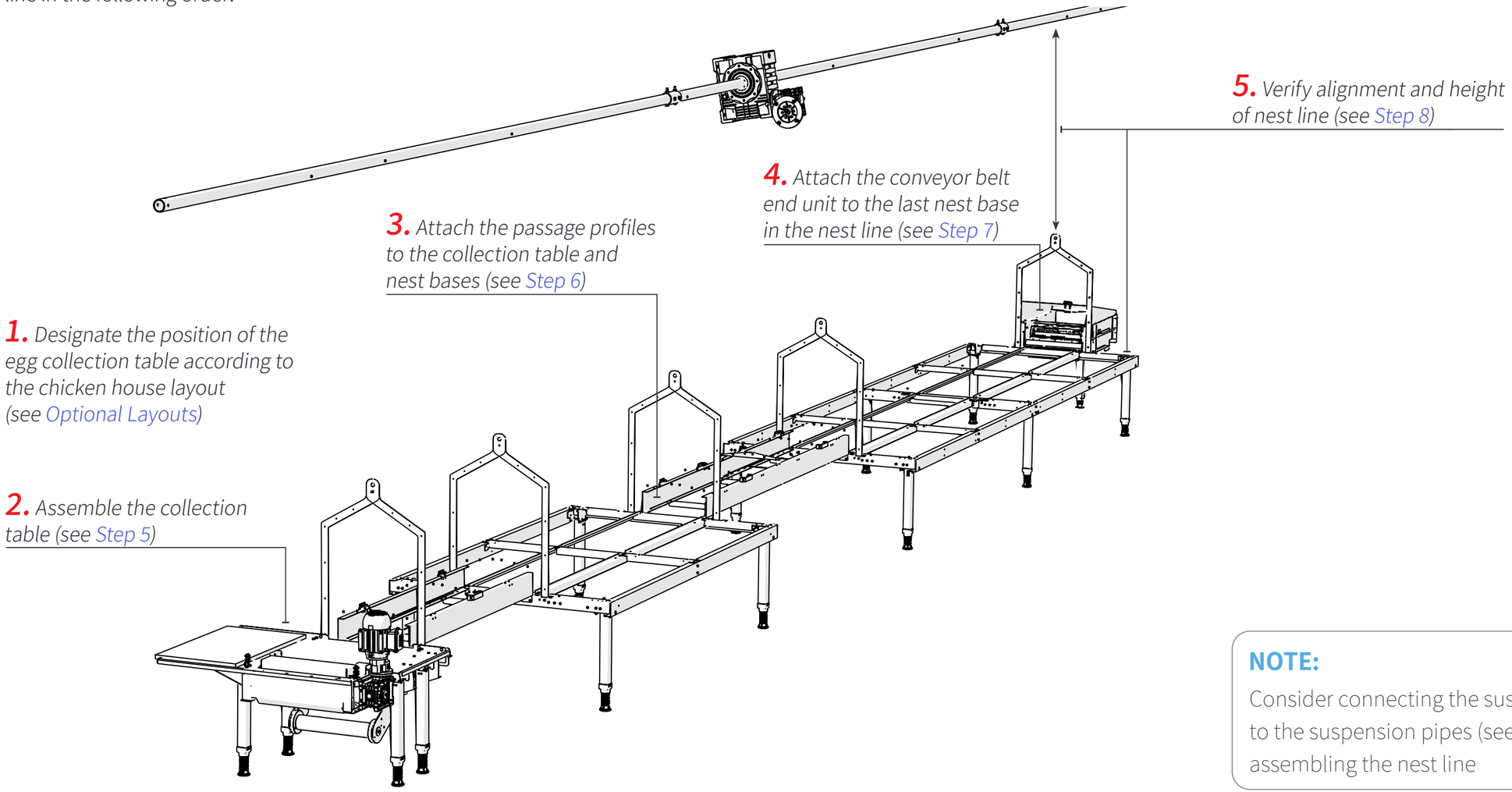

NOTE:
Consider connecting the suspension cables to the suspension pipes (see Step 11) before assembling the nest line

Step 5: Assembling the Collection Table

1. *Insert the four collection table legs (8) into the brackets and attach using four screws (1) and four nuts (4)*

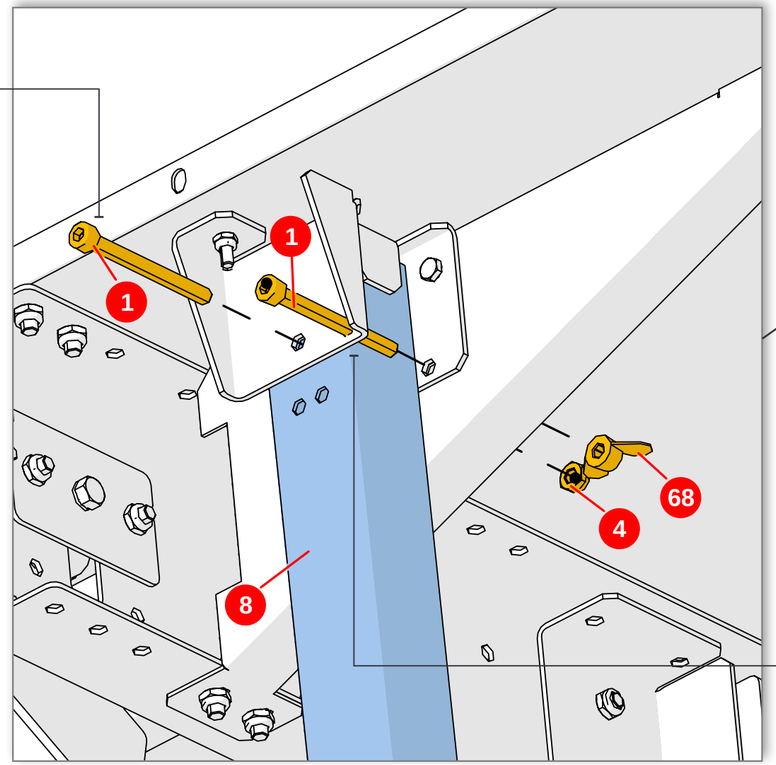

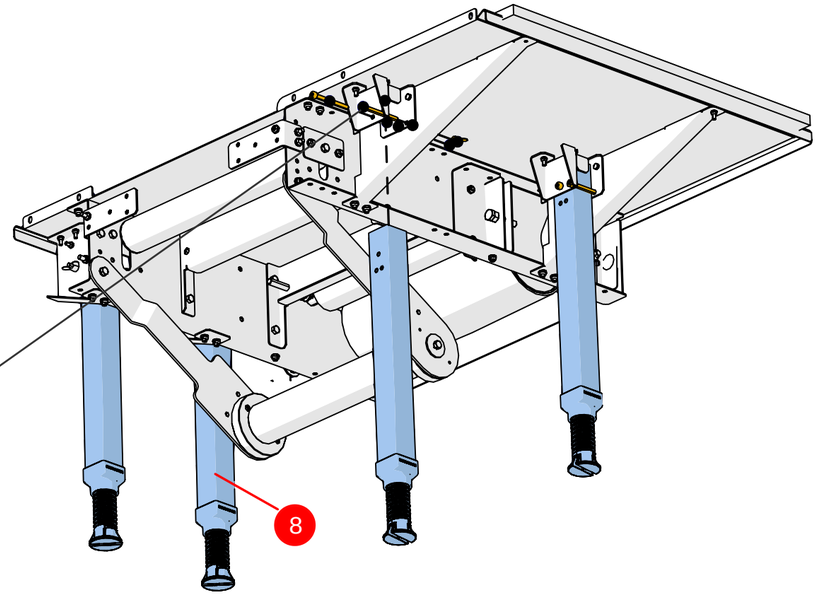

2. *Insert four locking screws (1) through the four brackets and fasten with four wing nuts (68)*

3. *Connect the collection table motor (81) to the drive unit*

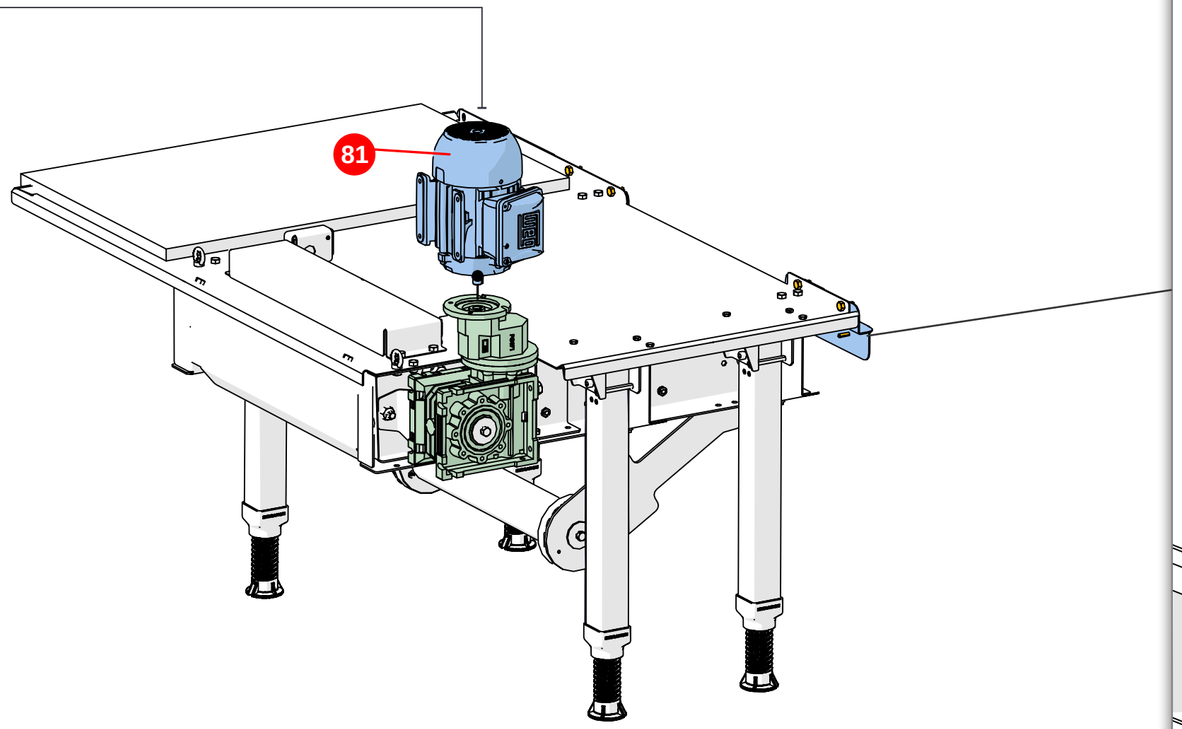

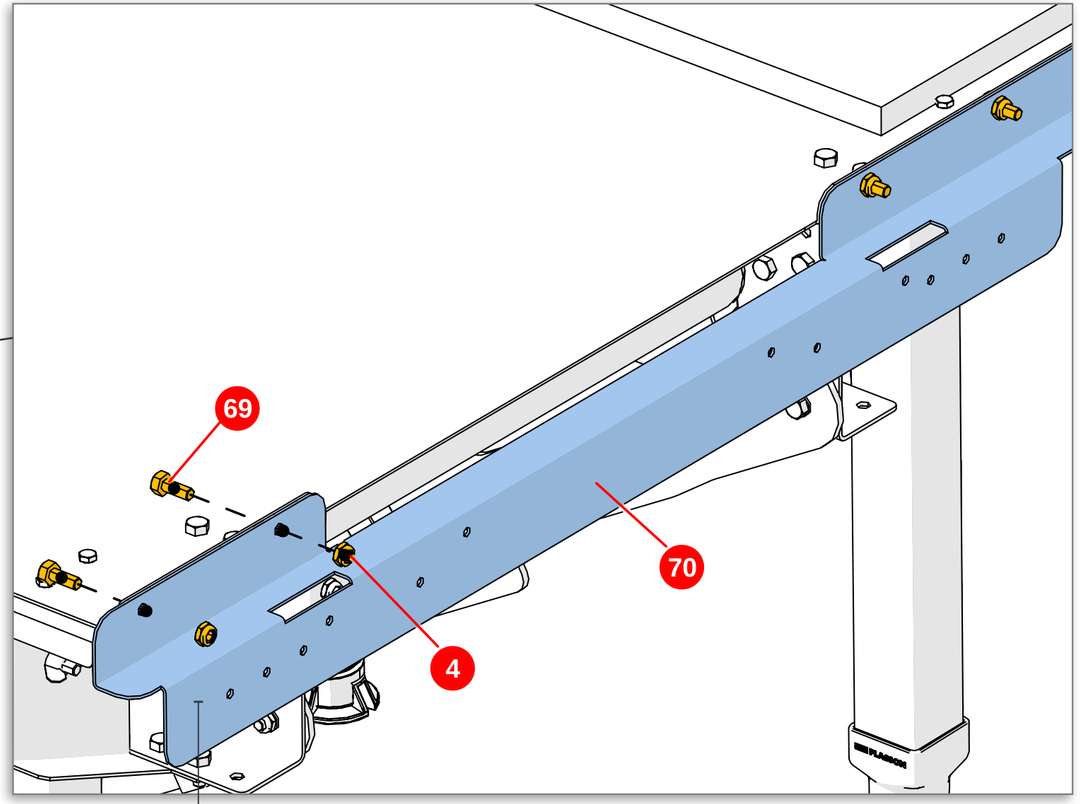

4. *Attach the table interconnection bracket (70) to the collection table using five screws (69) and five nuts (4)*

5. *Insert the two suspension frames (15) into the slits located on the interconnection bracket*

6. *Attach the suspension structure frames to the interconnection bracket using eight screws (2) and eight nuts (5)*

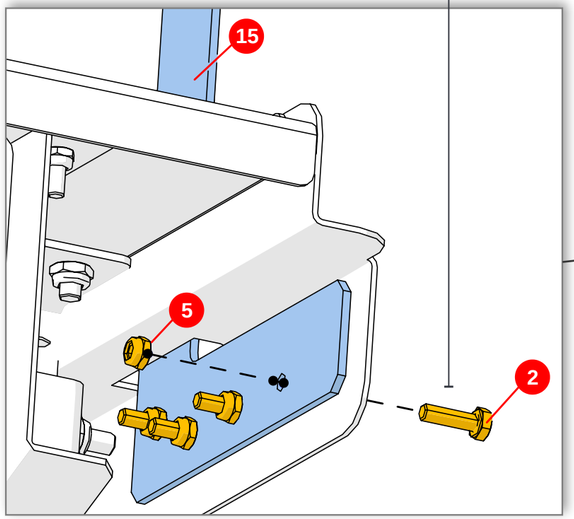

Reverse angle

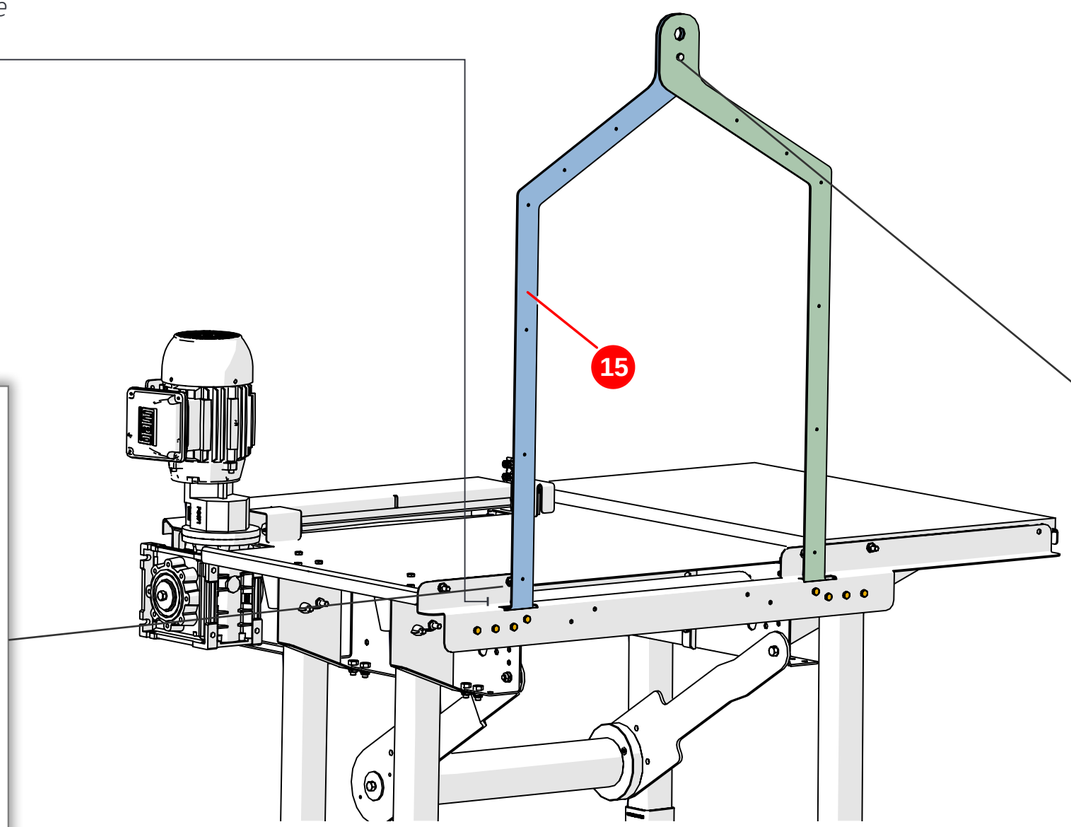

NOTE:
Insert the screw starting from the outside suspension frame

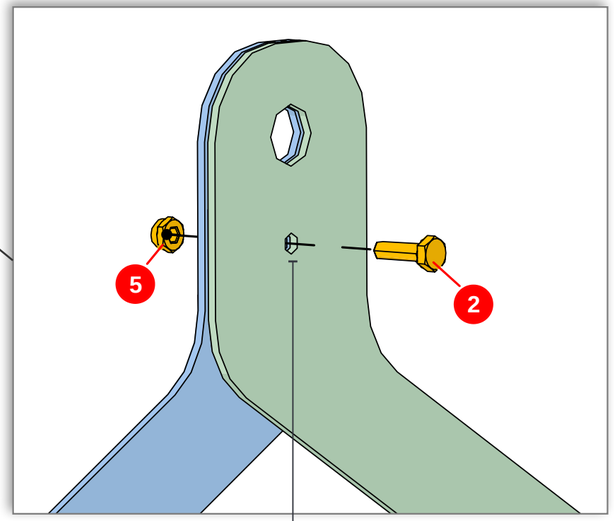

7. *Connect the two suspension structure frames together using one screw (2) and one nut (5)*

Step 6: Installing the Passage Profiles

1. *Attach two passage side profiles (26) to the nest bases and to the end of the collection table using four screws (2) and four nuts (5) per each side*

NOTE:
Mind rivet orientation

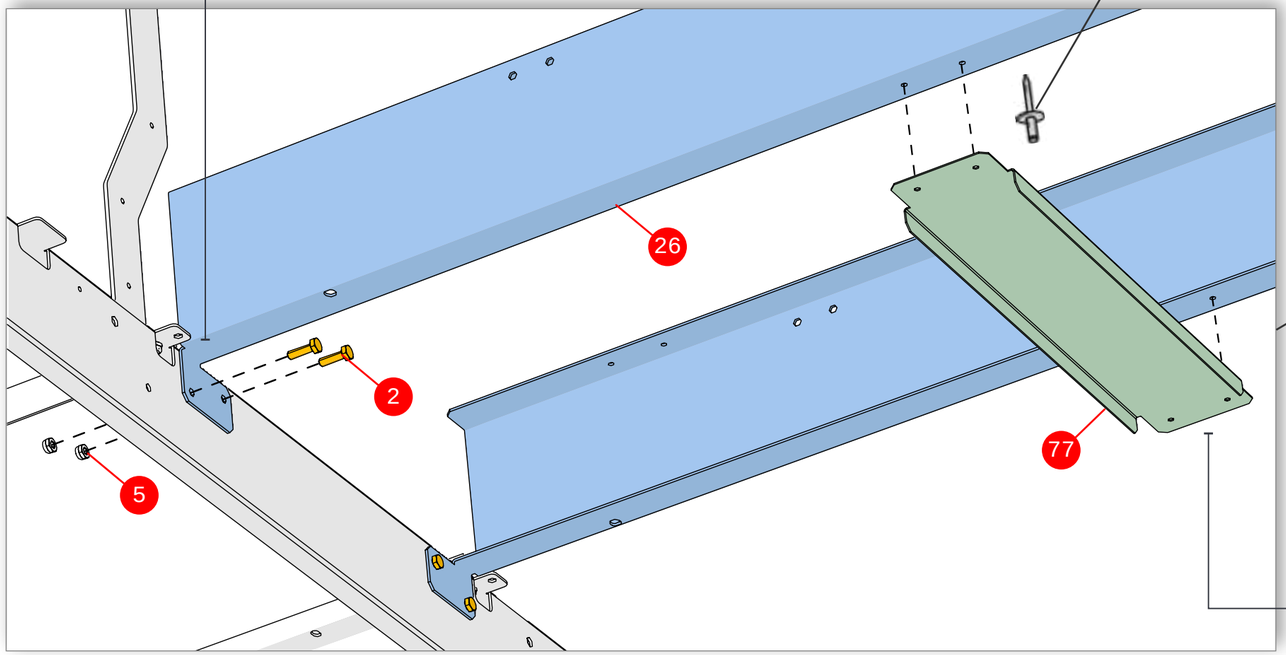

Bottom view

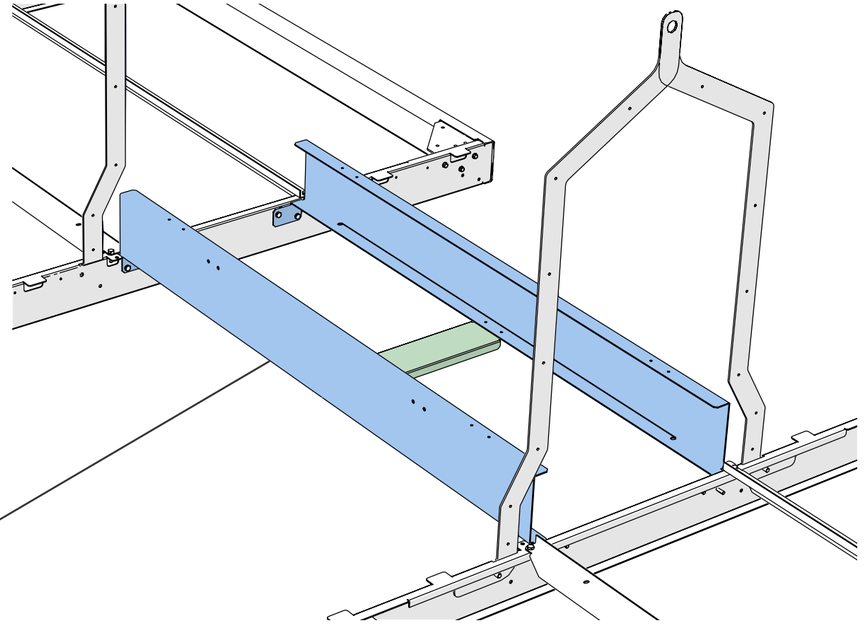

2. *Attach bottom support beam (77) to the passage side profiles using four rivets (6)*

Step 7: Installing the Conveyor Belt End Unit

1. *Attach the conveyor belt end unit (82) to the nest base using two screws (2) and two nuts (5)*

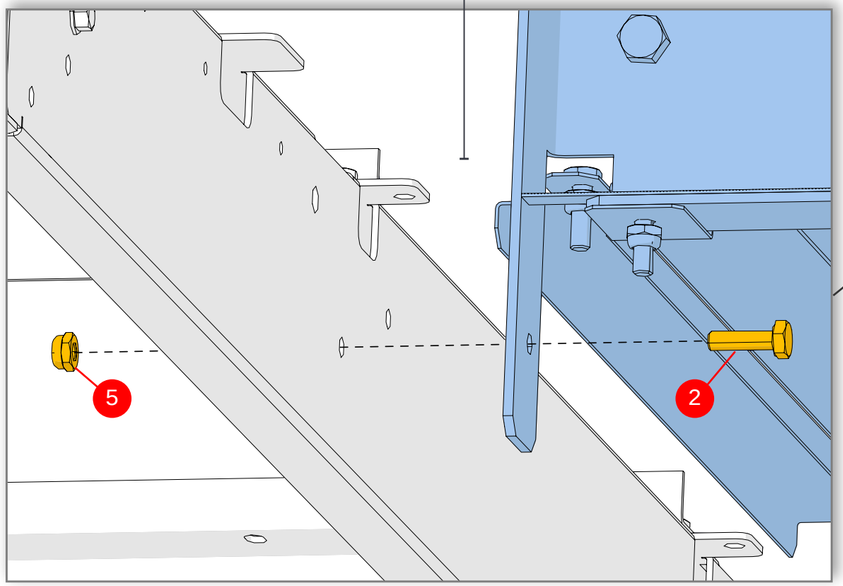

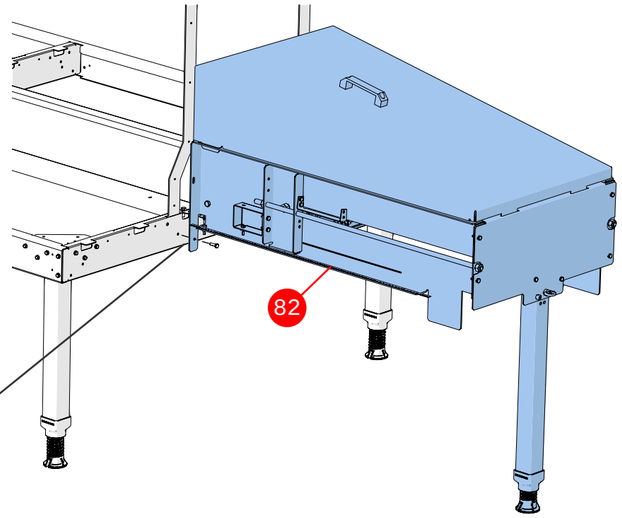

NOTE:
The conveyor belt end unit attaches to the last nest in the line

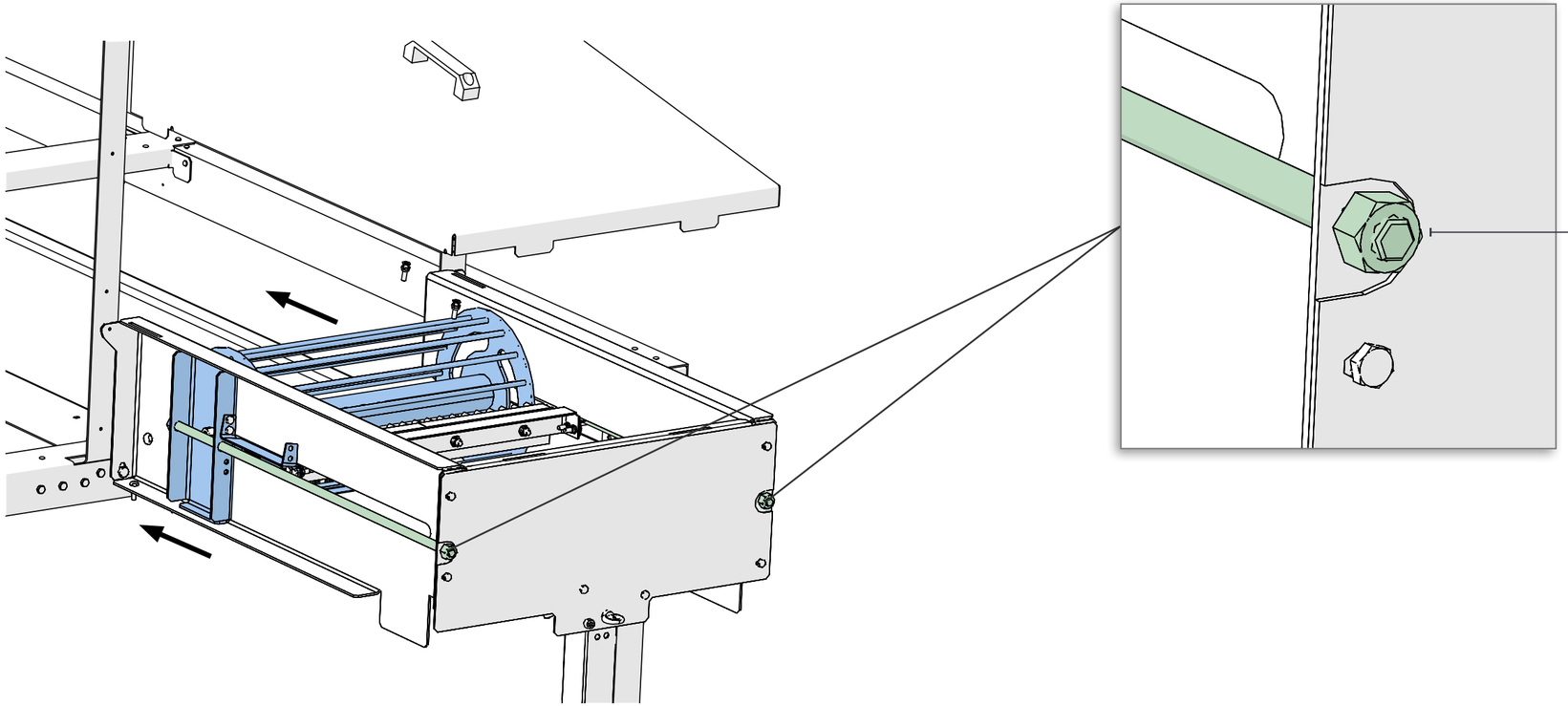

2. *Loosen the two nuts on either side of the end unit and move the drum as close as possible to the nest base*

Step 8: Verifying Alignment and Height of Nest Line

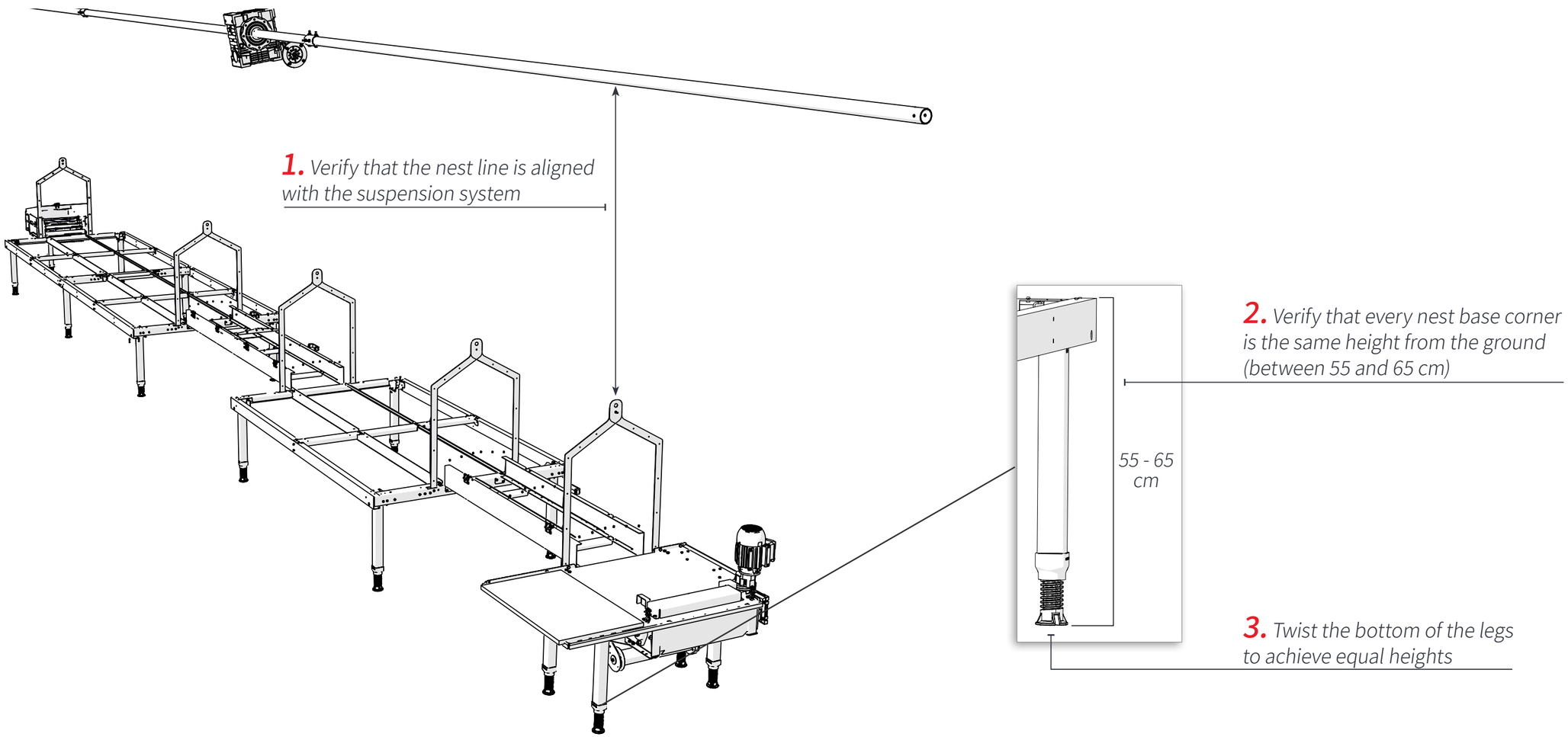

Step 9: Attaching a Cable to the Collection Table

1. *Cut 4 mm galvanized cable (30) to a length of 260 cm*

2. *Loop both ends of the cable through the two rings on the collection table, place two wire thimble (71), and fasten using two clamps (31) per each loop*

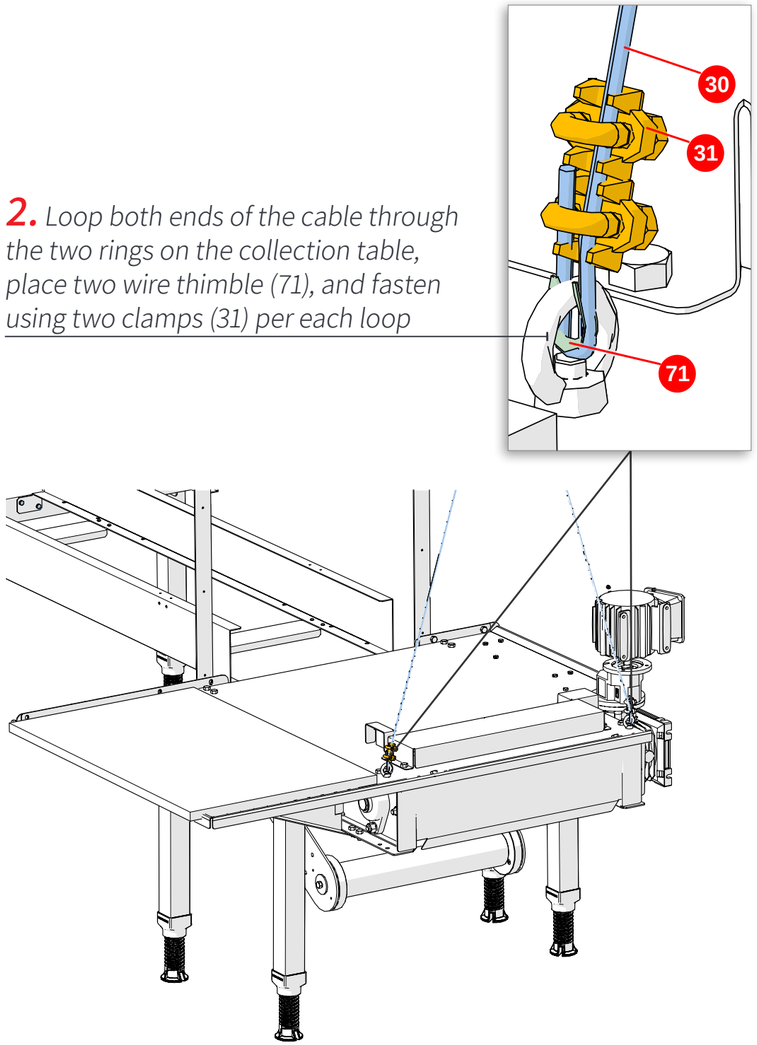

Step 10: Cutting Suspension Cables to Length

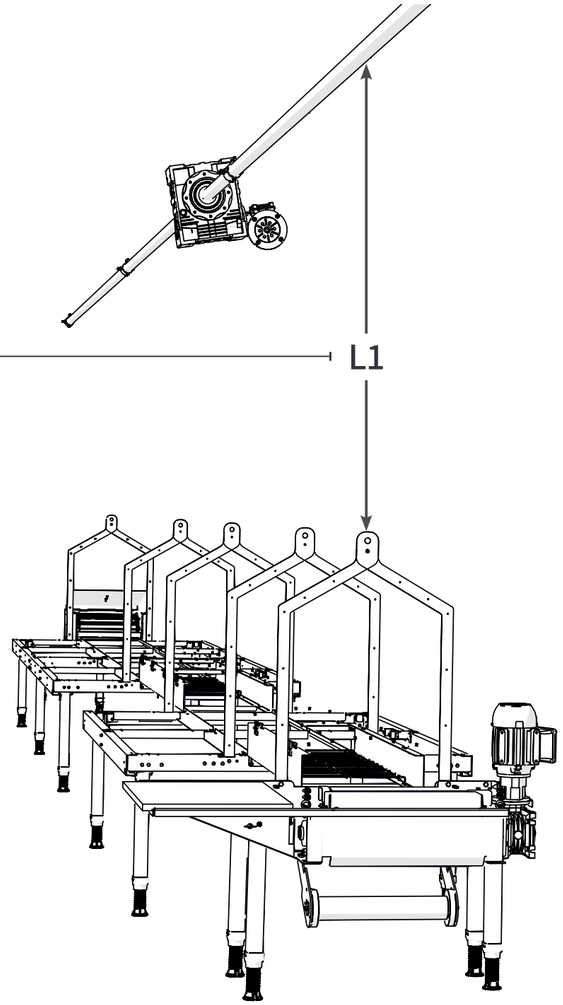

1. *Measure the distance (L1) from the bottom of the suspension pipe to the suspension frame hole*

2. *Cut 4 mm galvanized cable (30) to length L1 plus two meters*

Cable length
L1 + 2 meters

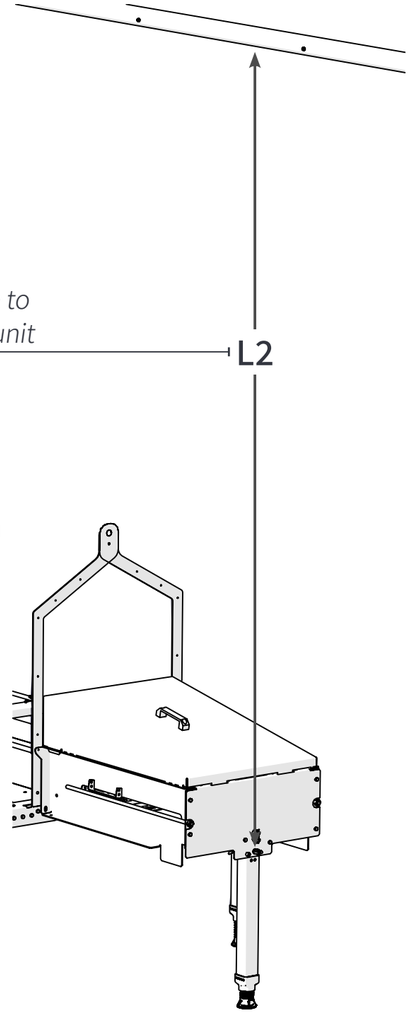

3. *Measure the distance (L2) from the bottom of the suspension pipe to the ring on the conveyor belt end unit*

4. *Cut 4 mm galvanized cable (30) to length L2 plus two meters*

Cable length
L2 + 2 meters

Step 11: Connecting Suspension Cables to the Suspension Pipes

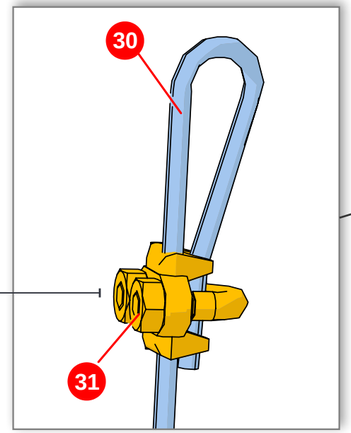

1. Make a 10 mm loop on the end of 4 mm cable galvanized cable (30), and fasten using a clamp (31)

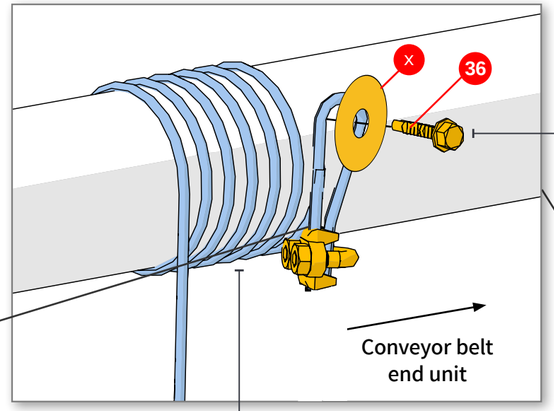

2. Wind the cable around the suspension pipe eight times

3. Attach the cable to the suspension pipe using a self-drilling screw (36) and washer (x)

NOTE:
Wind the cable in the direction of the conveyor belt end unit, and verify correct rotation orientation

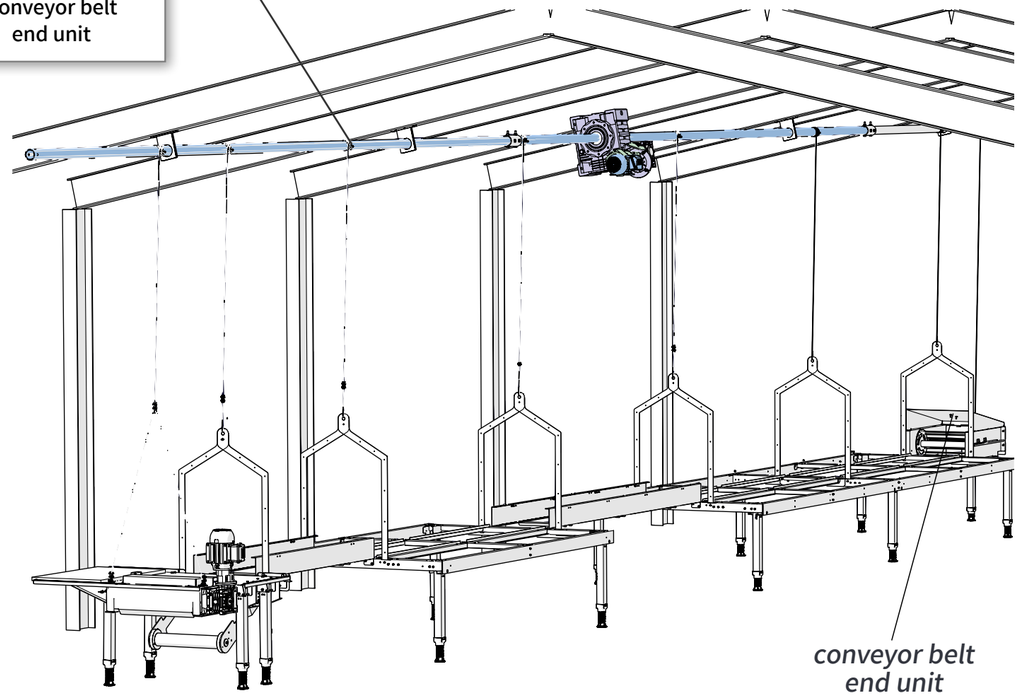

Step 12: Connecting Suspension Cables to Nest Line

To connect the suspension cables (30) to the nest line, place a wire thimble (71) and fasten using two clamps (31)

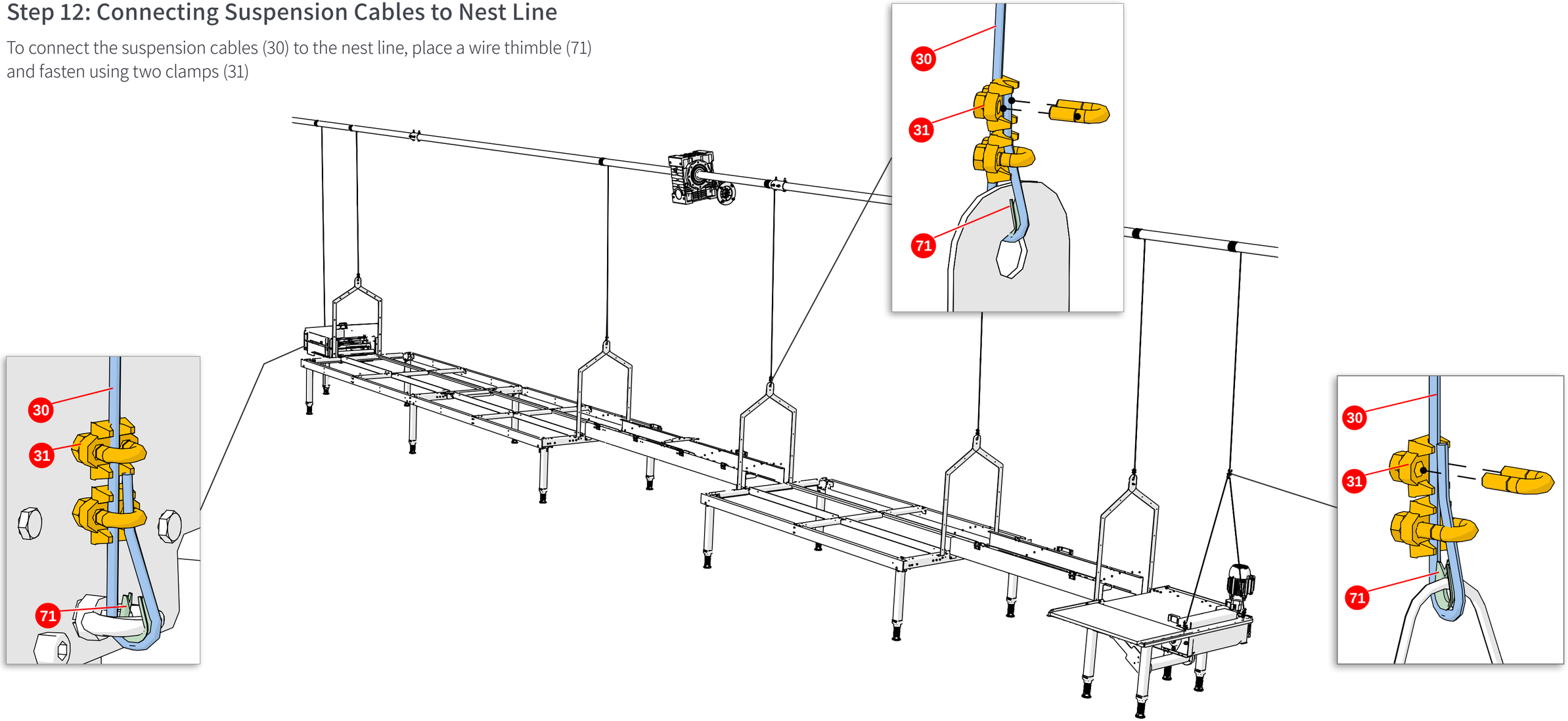

Step 13: Calibrating the Suspension System

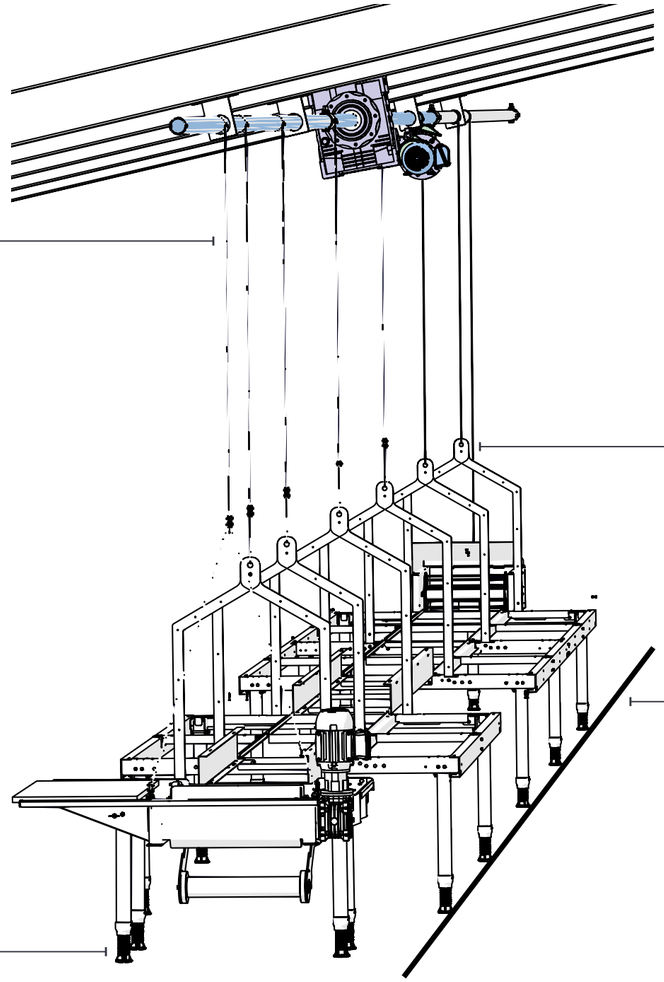

1. *Verify that all suspension cables are securely fastened*

2. *Lift the system off the ground a few centimeters*

3. *Lower the system until the legs are touching the ground*

4. *Tighten any slack wires*

5. *Verify that the collection table, bases, and end unit are in line with each other*

⚠ CAUTION

The suspension system is controlled manually and does not have an automatic stop. Keep eye contact with the system at all times while operating the suspension mechanism, and make sure to stop operating the motor once the legs have reached the ground.

Step 14: Inserting the Conveyor Belt and Belt Support Grids

1. *Verify the counterbalance is attached to the collection table*

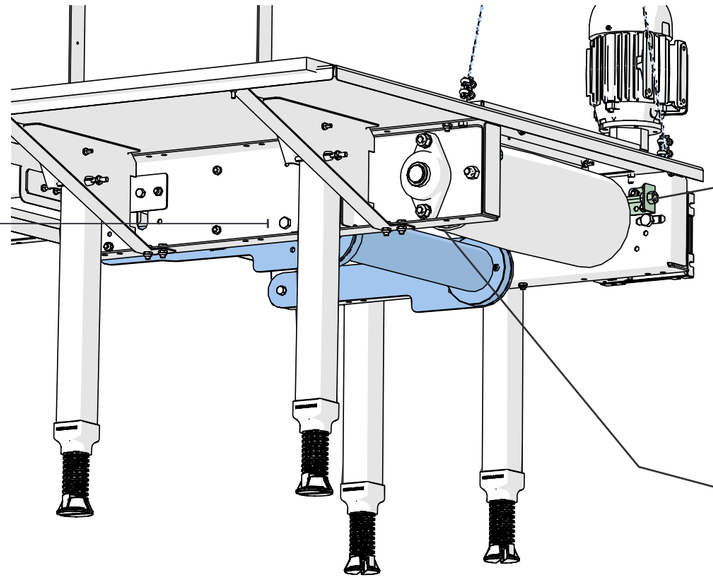

2. *Adjust the nuts on both sides of the table to bring the friction roller as close as possible in the direction of the nests*

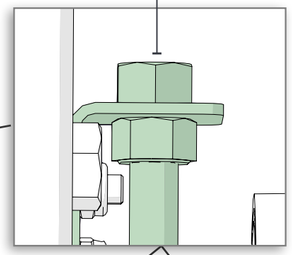

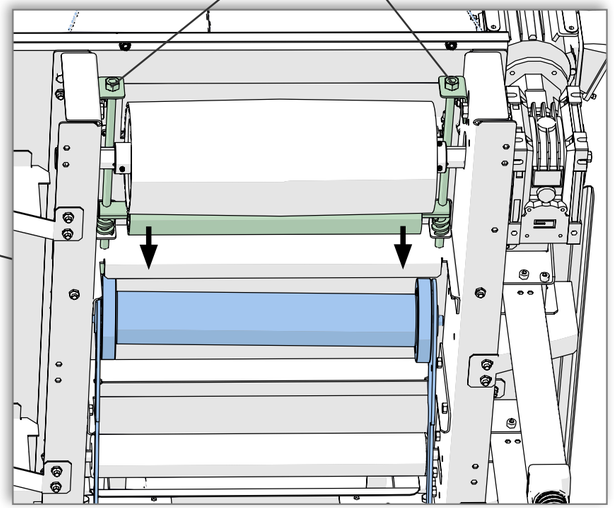

Bottom view

NOTE:
The friction roller must remain parallel to the drive drum

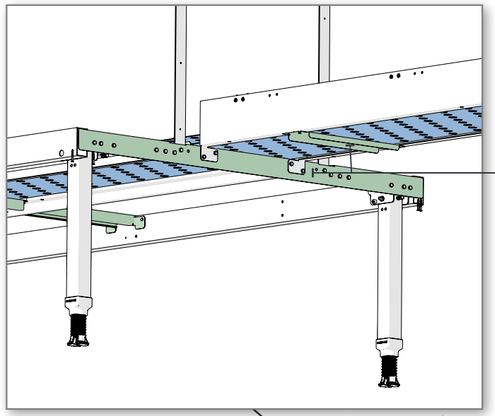

Bottom view

4. *Pull the conveyor belt to the conveyor belt end unit, placing the belt on top of the passage and nest base bottom support beams*

3. *Insert the conveyor belt (58) under the counterbalance (A) and over the return roller (B)*

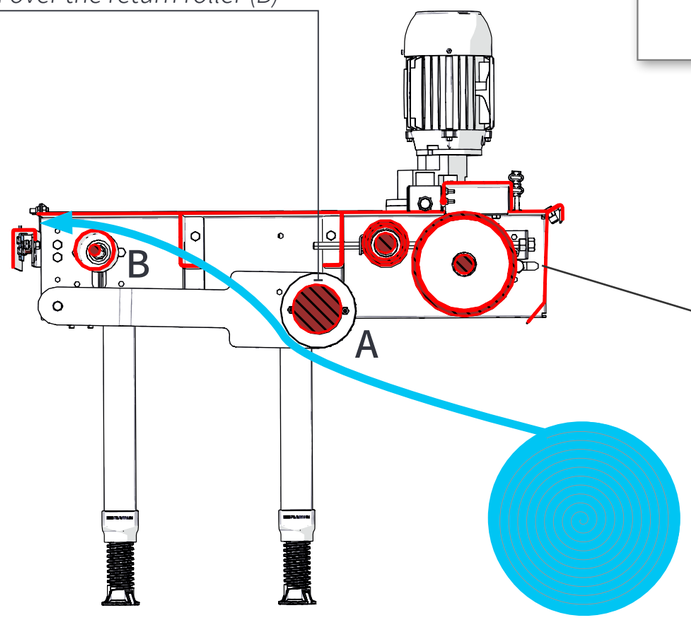

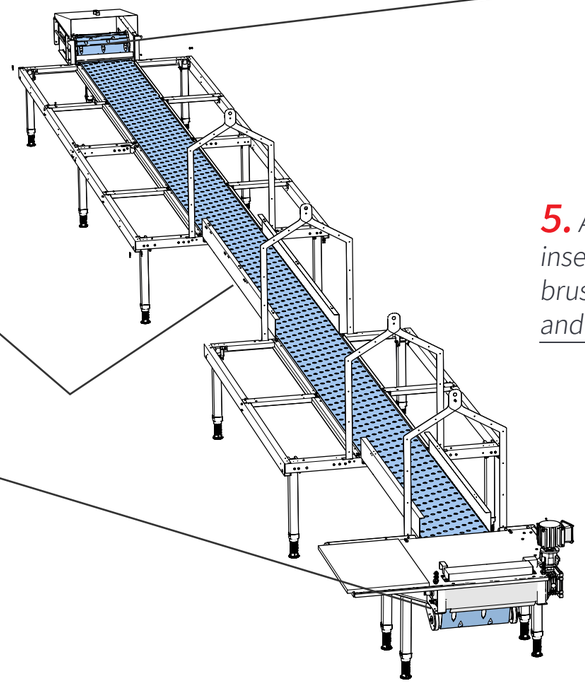

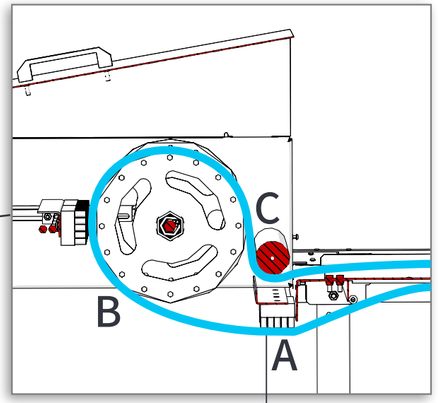

5. *At the conveyor belt end unit, insert the conveyor belt under the brush (A), around the drum (B), and under the roller (C)*

6. *Install the belt grills (21) over the conveyor belt*

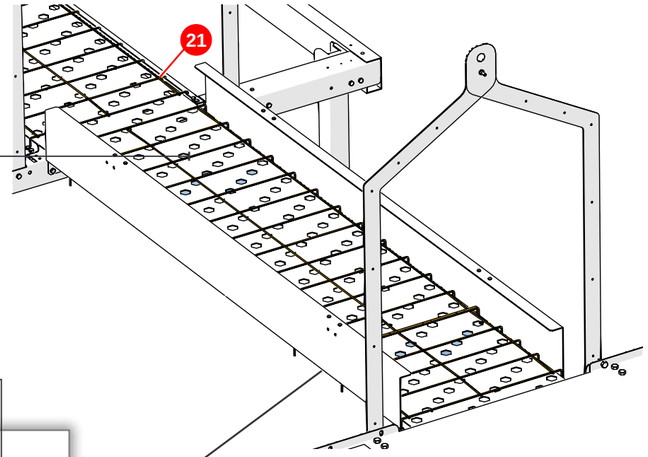

7. *Verify the long rods at the belt grill ends insert into the passage side beam holes*

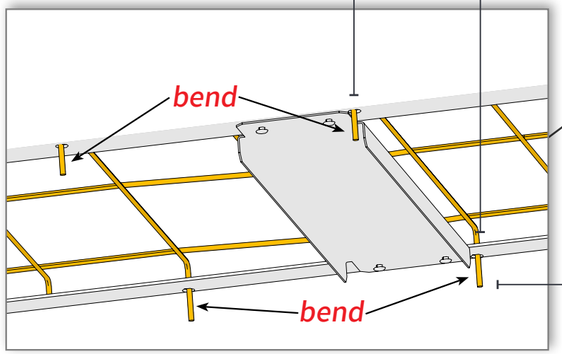

Bottom view

8. *Bend the ends of the rods inward*

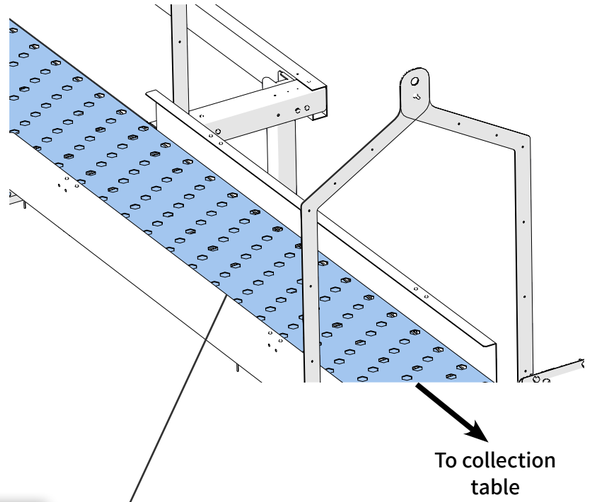

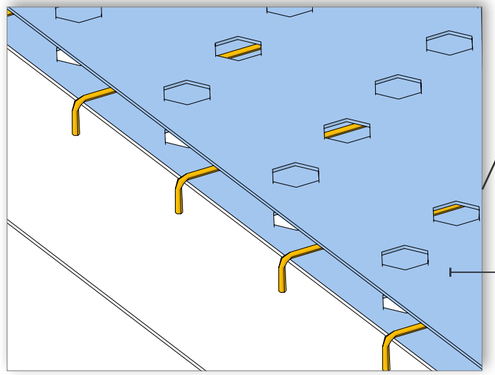

9. *Pull the conveyor belt over the belt grills and back to the collection table*

NOTE:

The two ends of the conveyor belt must have an overlap of at least five holes. Ensure the end coming from the converyor belt end unit is on top.

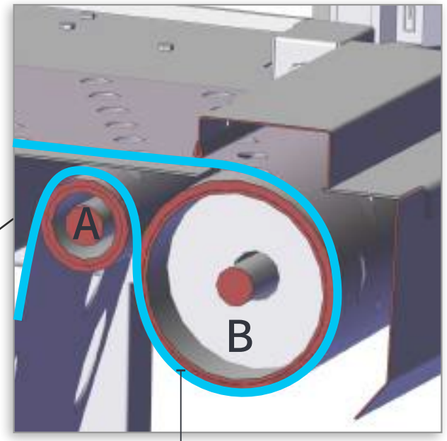

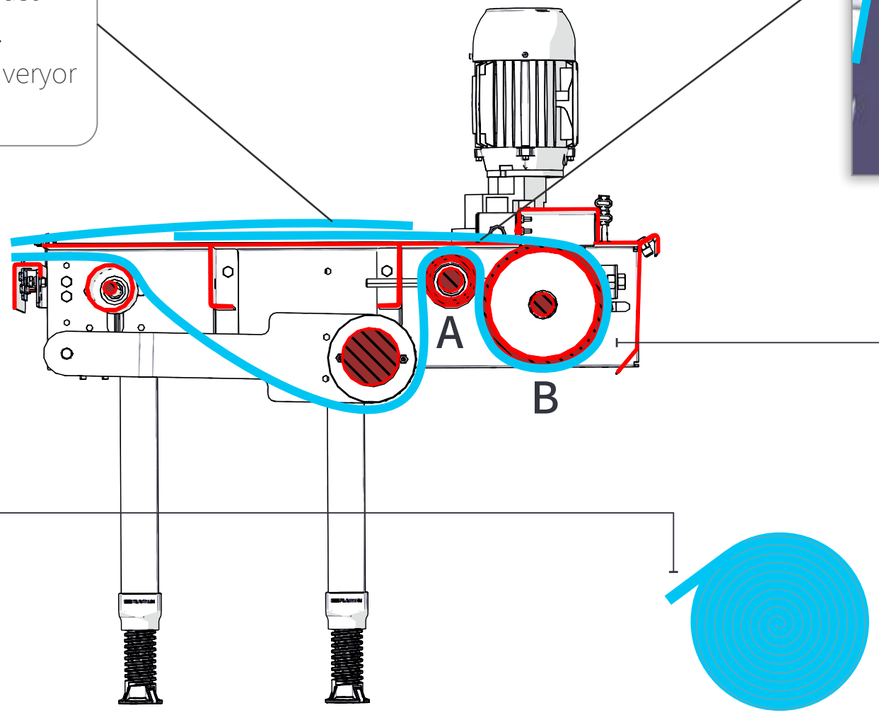

11. *Insert the belt over the friction roller (A), under and around the drive drum (B), and under the other end of the belt*

10. *Cut the belt to a length sufficient to reach the top of the table and overlap the other end of the belt*

Step 15: Connecting the Conveyor Belt Ends

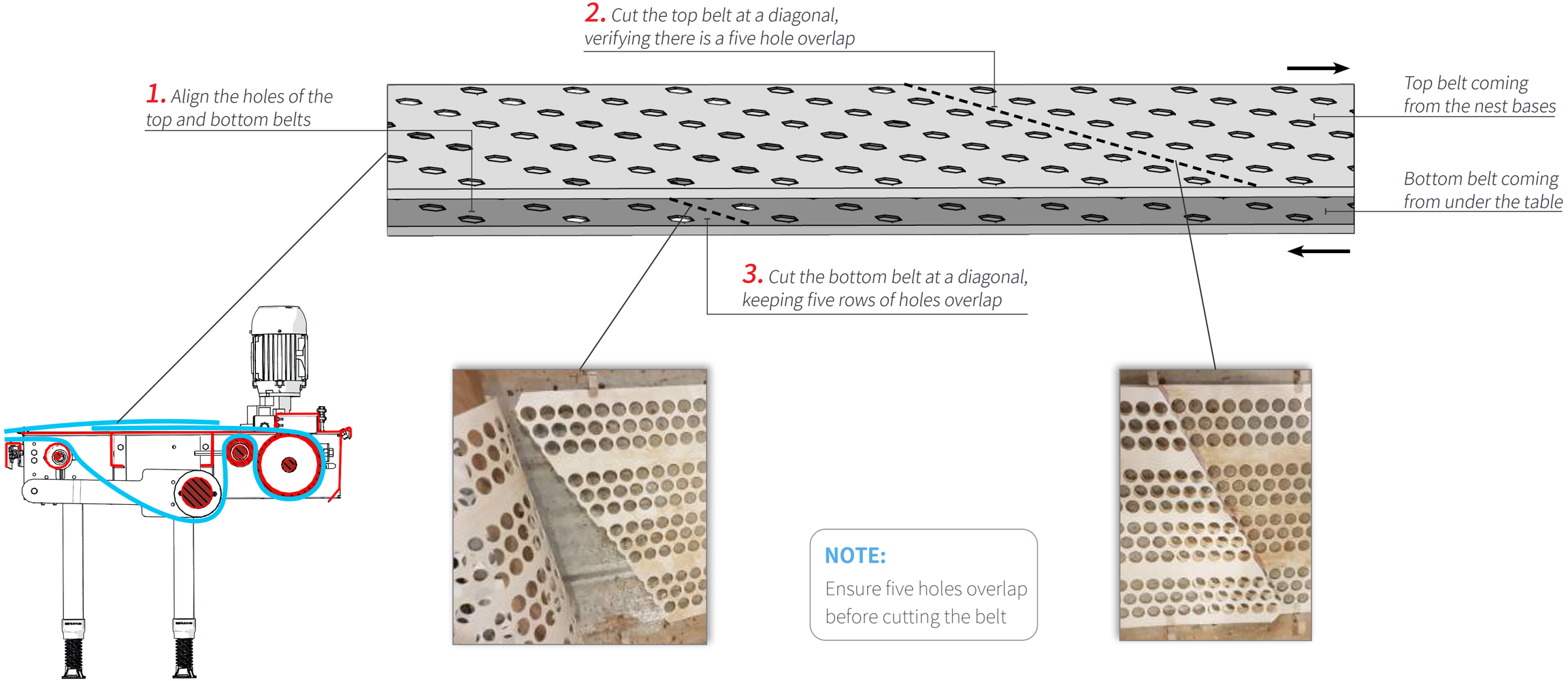

NOTE:
Ensure five holes overlap before cutting the belt

4. *Weave 60 cm of string (73) through the two belt ends and pull tight*

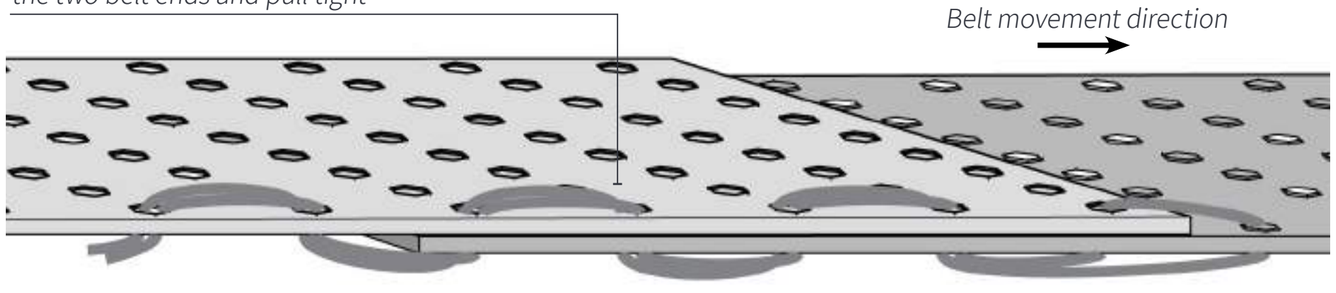

5. *Repeat the weave across all rows*

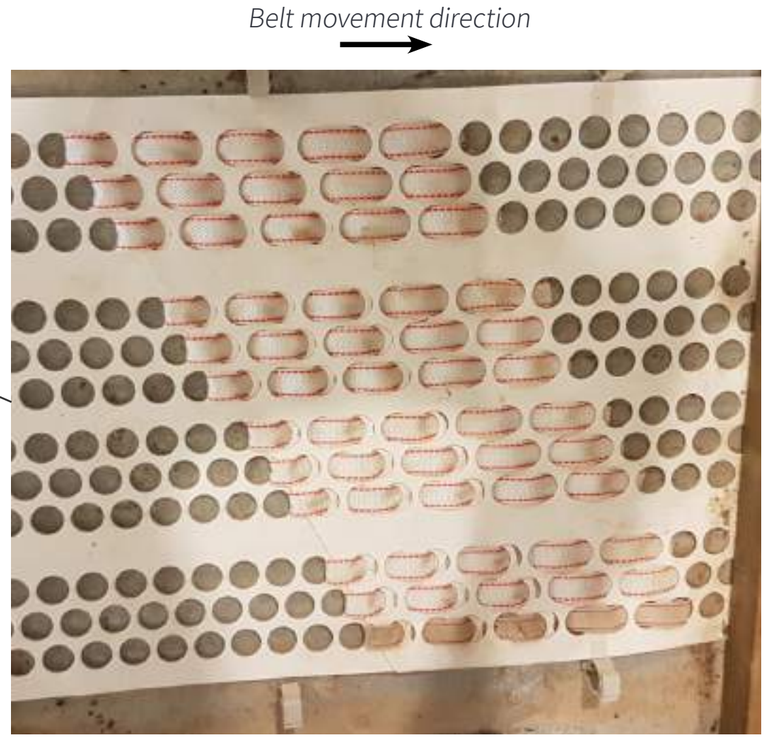

Step 16: Initial Conveyor Belt Alignment

1. *Remove one screw (1) and one wing nut (68) on either side of the collection table to release the counterbalance*

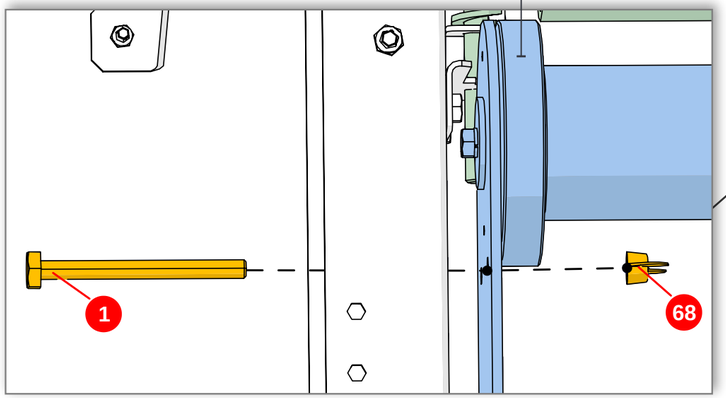

Bottom view

2. *Run the belt at a low speed*

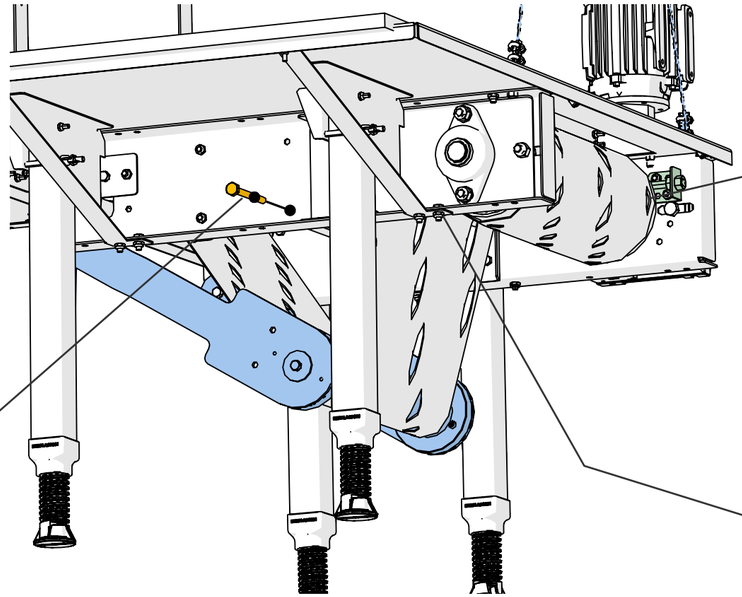

3. *If the belt slips on the drive drum, adjust the nuts on both sides to bring the friction roller closer to the drum*

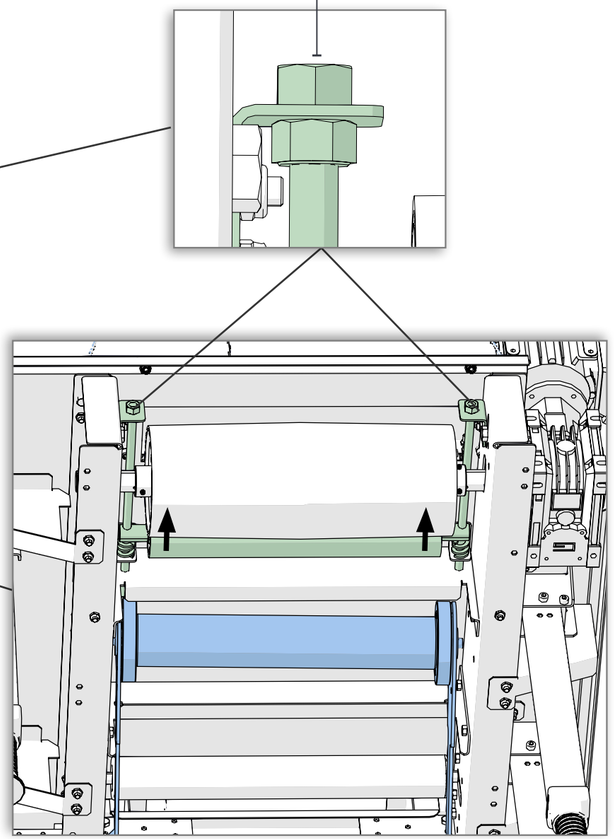

Bottom view

NOTE:
The friction roller must remain parallel to the drive drum

To adjust the drive drum on either side of the table, release the nut (A) and adjust the nuts and screw (B)

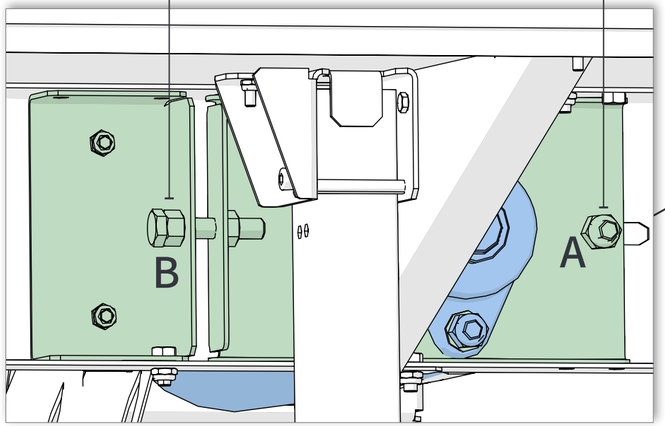

Side view

4. *If the belt veers to one side, adjust the drive drum position by either creating more tension on the side the belt is veering to or releasing tension on the other side*

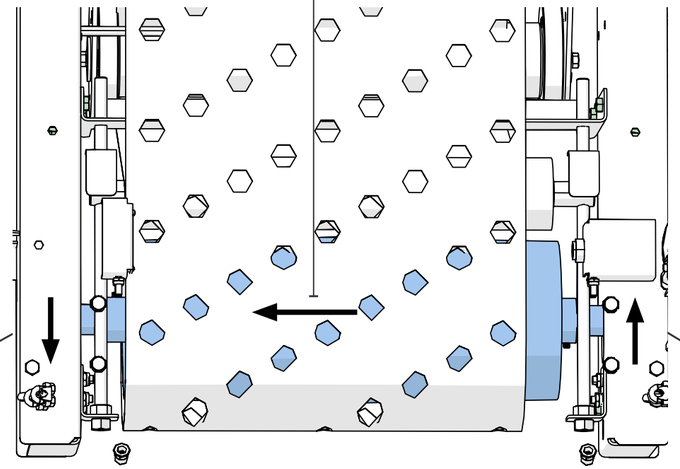

NOTE:
Once the adjustment has been made, retighten the nut (A) to secure the drive drum

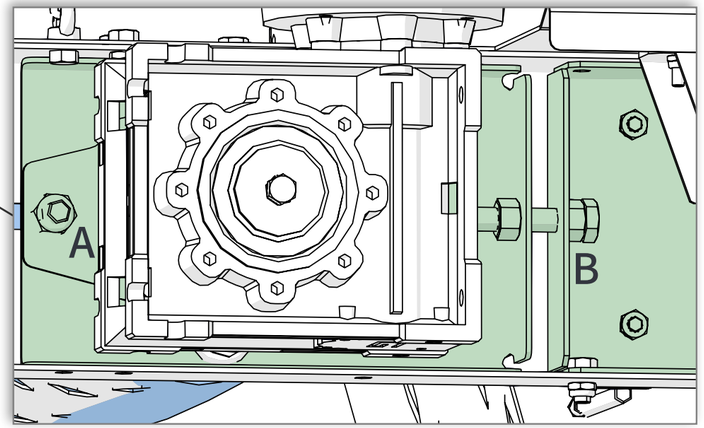

Side view

5. *Increase the speed of the belt and ensure it is centered and stable*

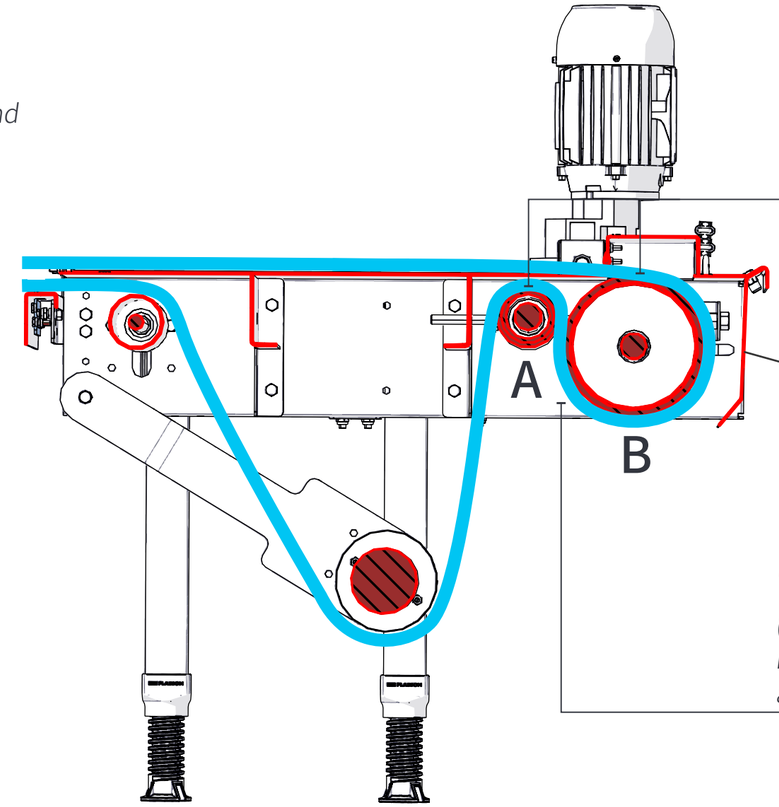

6. *Readjust the friction roller (A) and drive drum (B) (see 3 and 4 above) to maintain proper belt movement as belt speed increases*

7. *Ensure the overlapping section of the belt (see Step 15) moves freely between the friction roller and drive drum. Move the friction roller away from the drive drum if belt gets stuck*

8. *Attach the collection table safety cover (75) using two screws (74)*

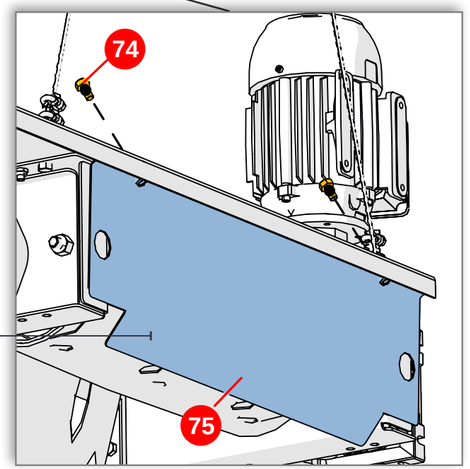

Step 17: Installing the Passage Covers

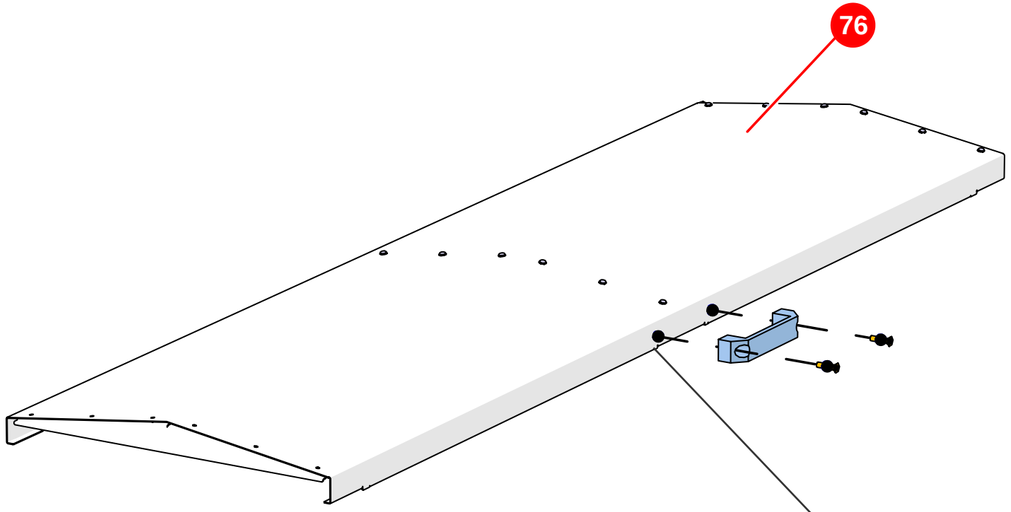

1. Attach the handle (72) to the passage cover (76) using two screws (52) and two nuts (5)

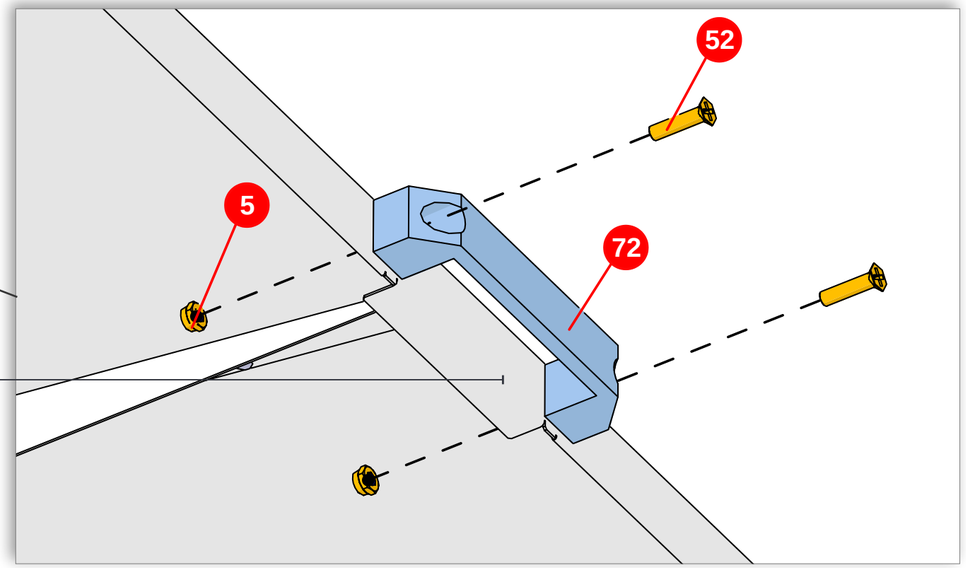

Bottom view

2. *Attach top support beams (77) to the passage side beams using four rivets (6) per each beam*

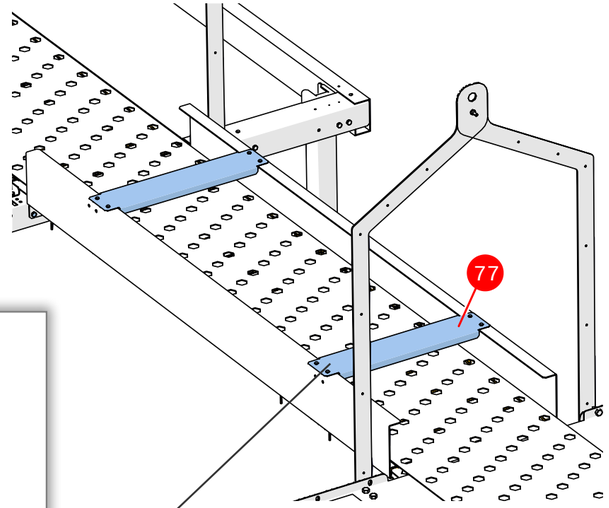

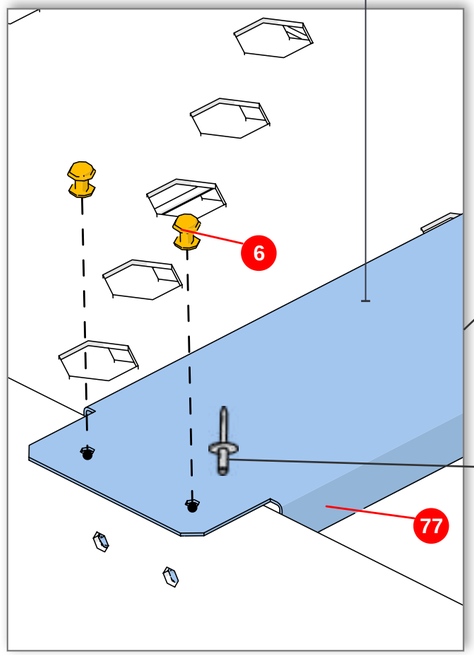

NOTE:
Mind rivet orientation

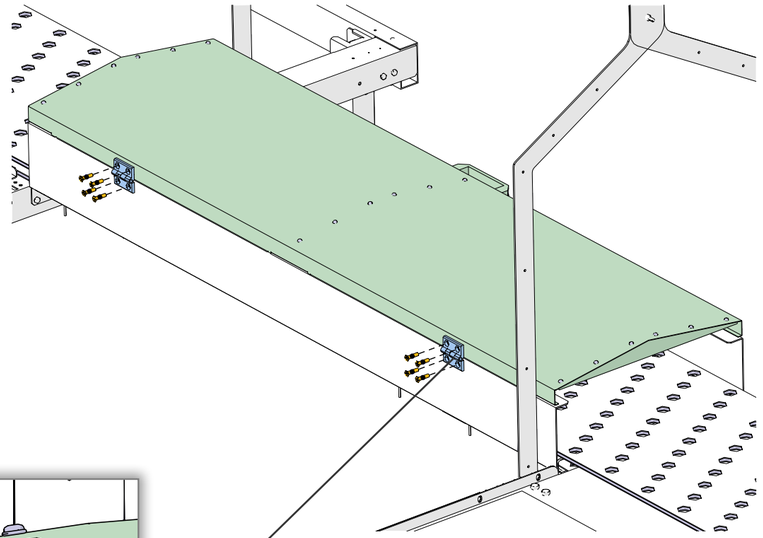

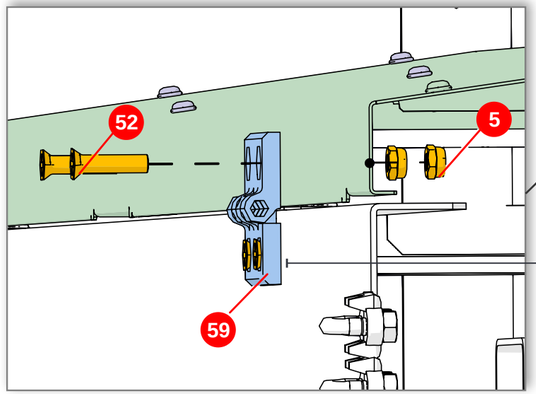

3. *Attach the passage cover to the passage side beam using two hinges (59), eight screws (52), and eight nuts (5)*

Step 18: Assembling the Nest Walls

1. *Attach the middle wall brackets (38) to both sides of the the middle wall (12) using three rivets (6) per bracket*

2. *Connect the middle wall to the nest base using six rivets (6)*

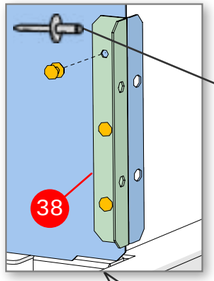

NOTE:
Mind rivet orientation

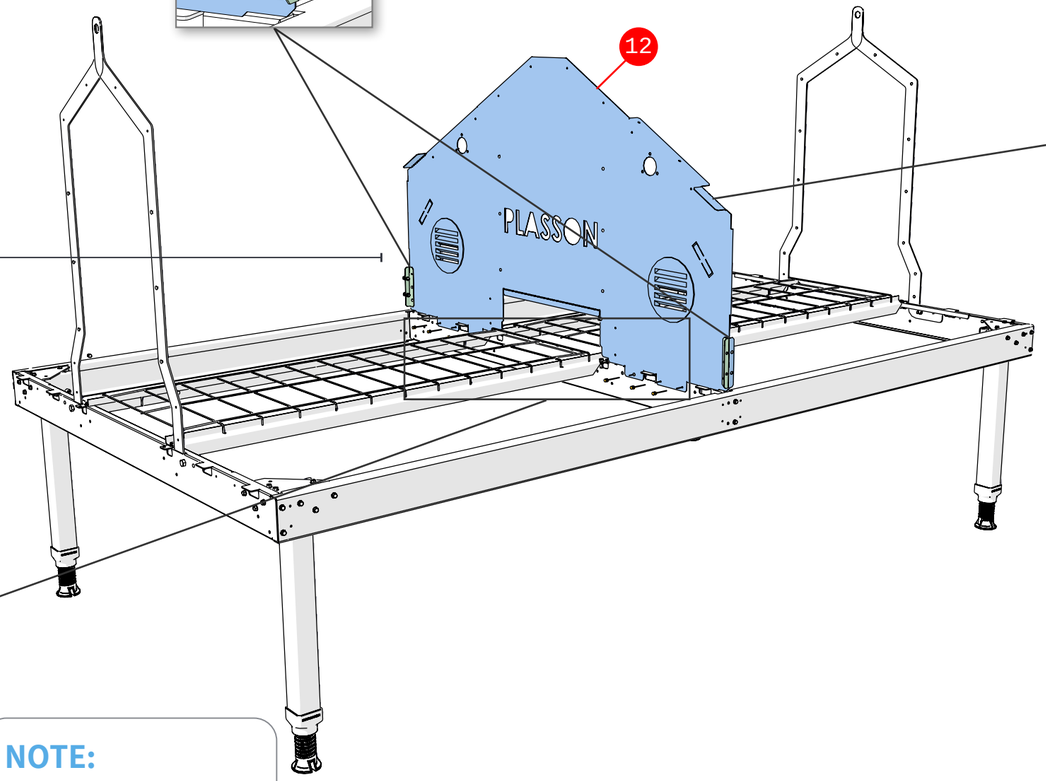

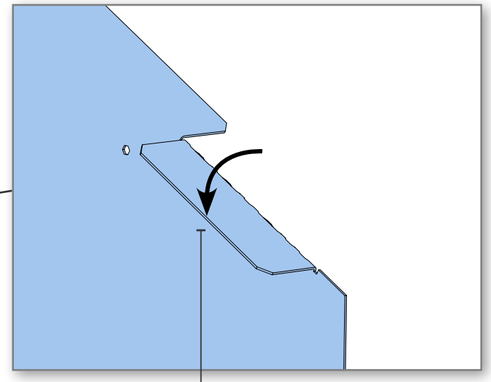

3. *Bend the tab in the opposite direction of the folded part above it*

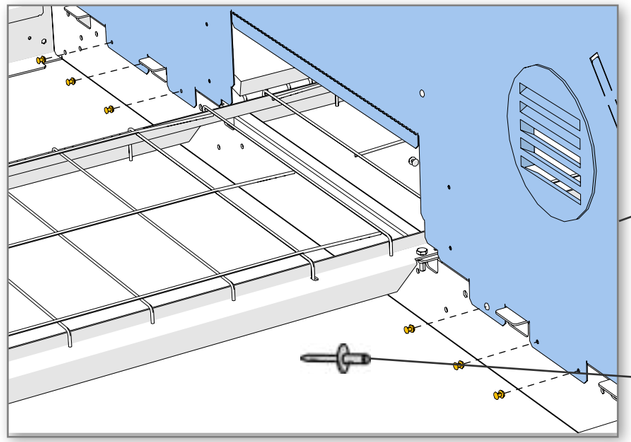

NOTE:
Mind rivet orientation

4. *Connect the side walls (12) to the nest base and suspension frame using fourteen rivets (6) per wall*

5. *Bend the tabs towards the inside of the nest*

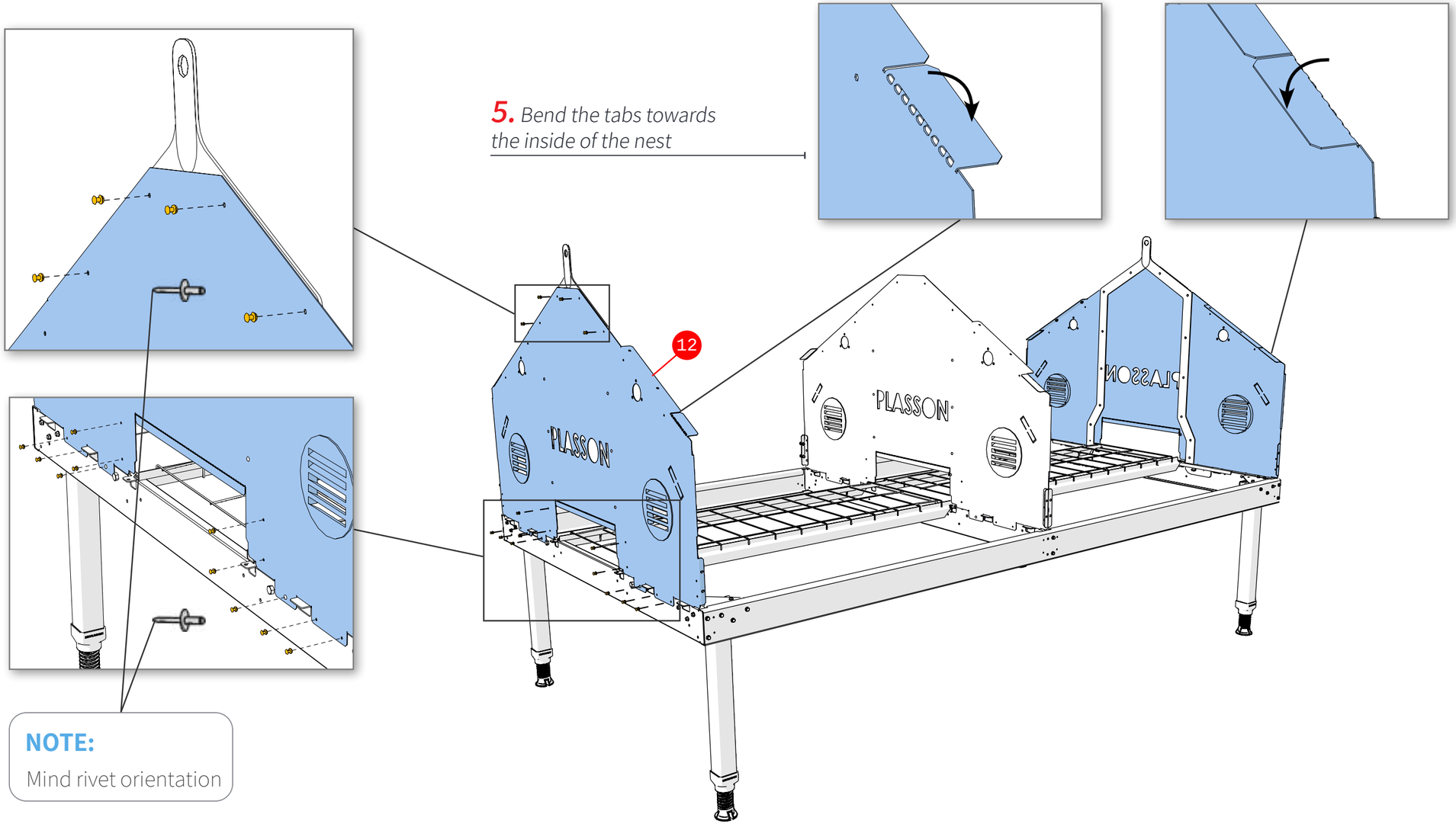

NOTE:
Mind rivet orientation

6. *Attach the end unit to the side wall of the last nest using one self-drilling screw (36) on each side*

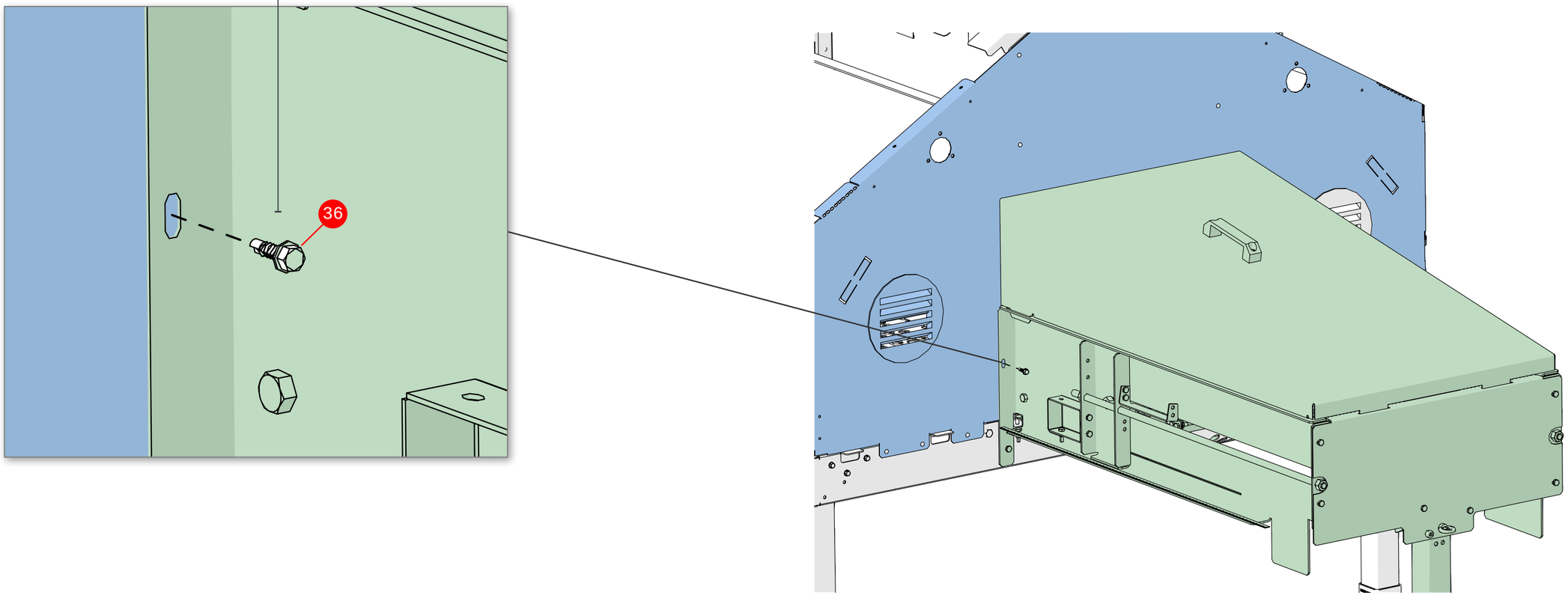

7. *Place the inner walls (14) between the side and middle wall*

8. *Connect the inner walls to the side wall using six rivets (6) per side wall*

9. *Connect the two inner walls and middle wall together using three rivets (6)*

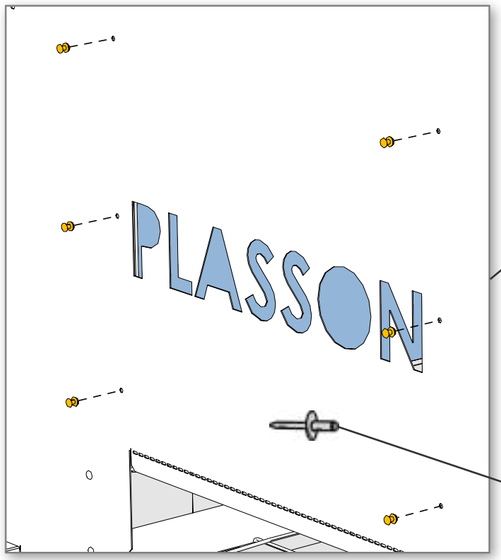

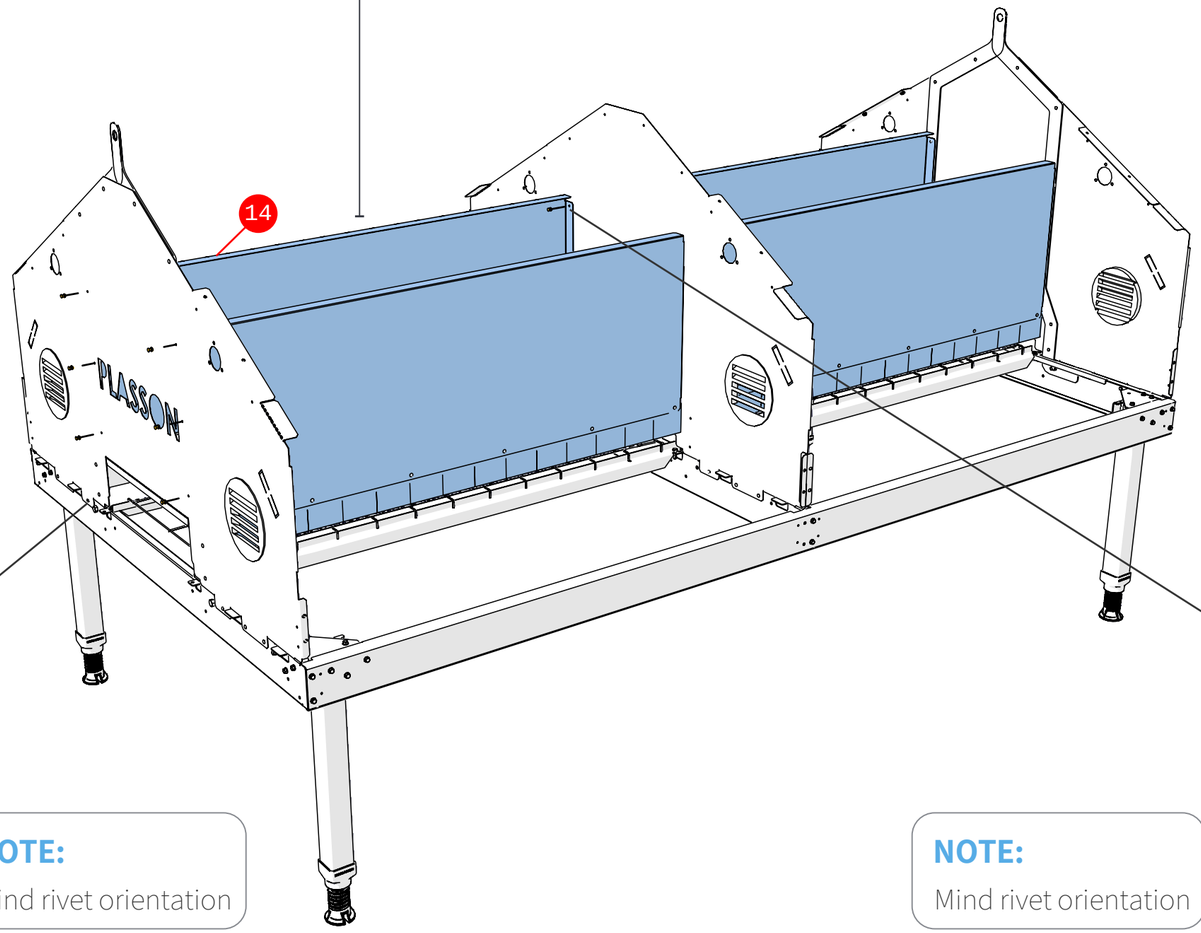

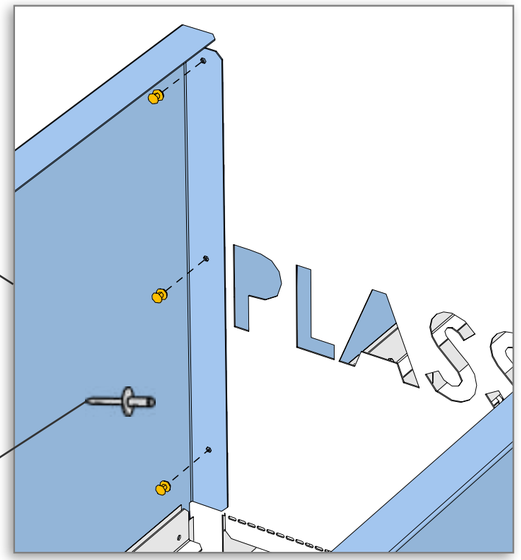

Inside view

NOTE:
Mind rivet orientation

NOTE:
Mind rivet orientation

Step 19: Inserting the Nest Floor Components

1. *Attach step plates (17) to both sides of the nest using six screws (2) and six nuts (5) per plate*

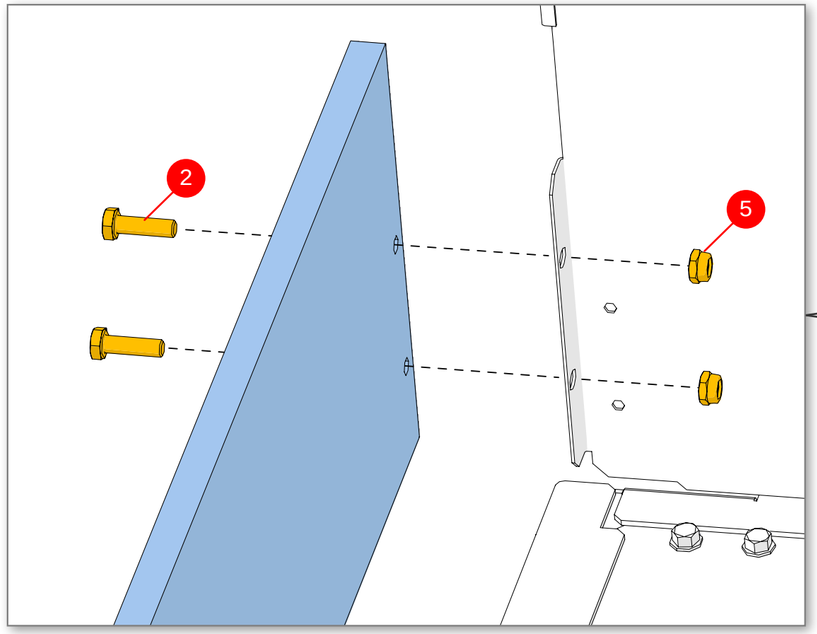

Inside view

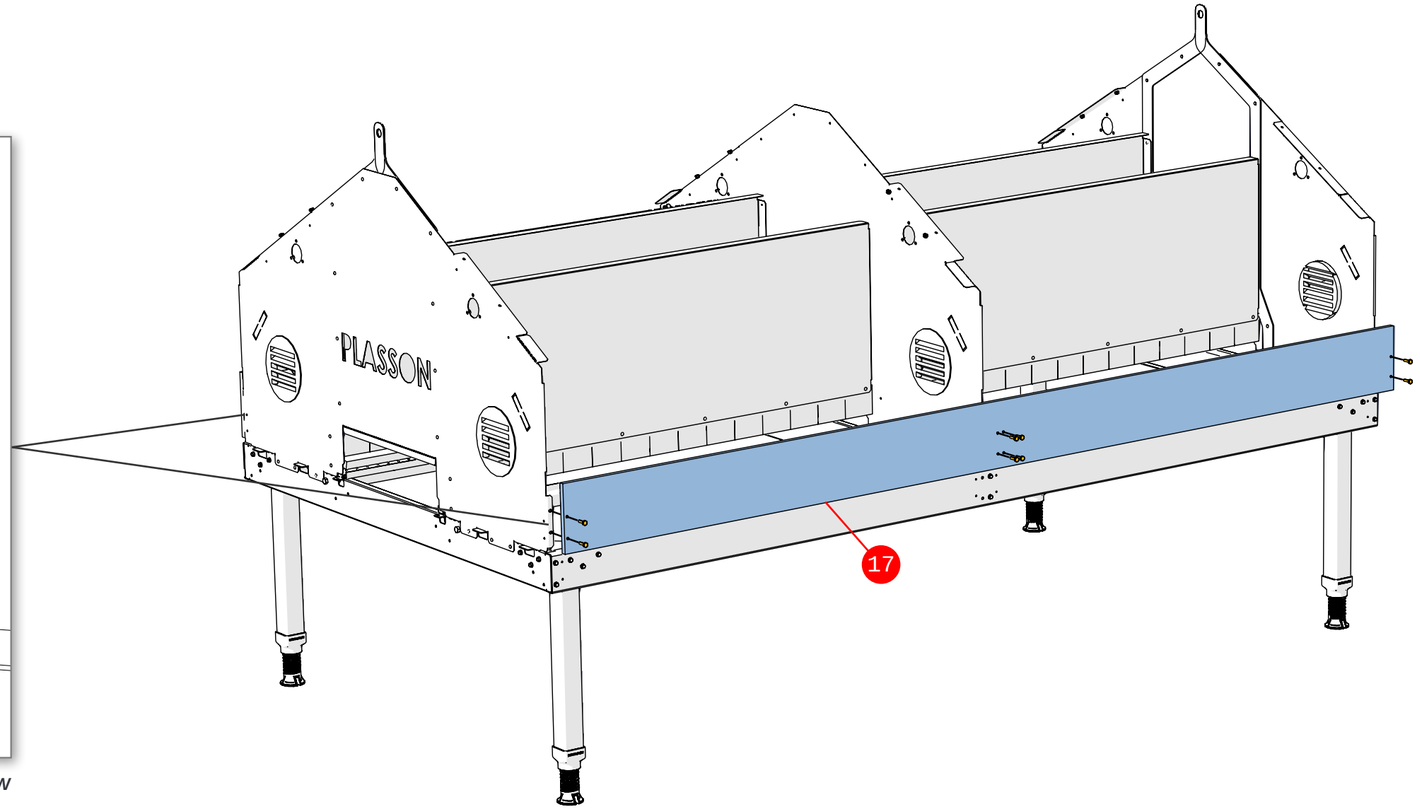

2. *Insert nest floors (16) into the nest*

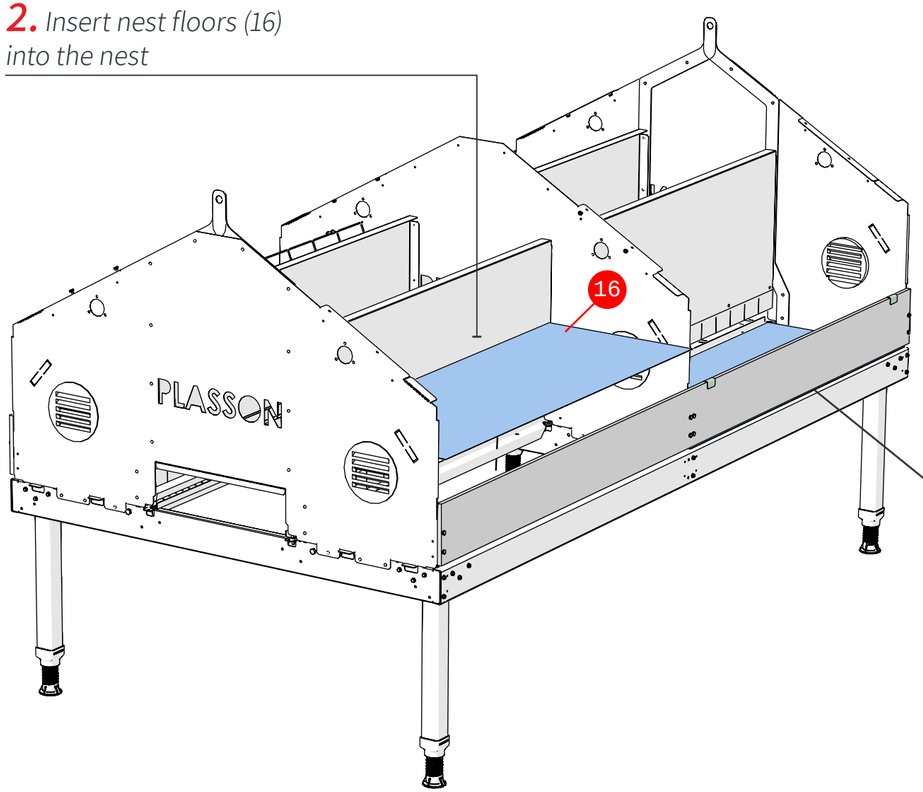

3. *Attach two grid holders (18) to each step plate using one rivet (6) per holder*

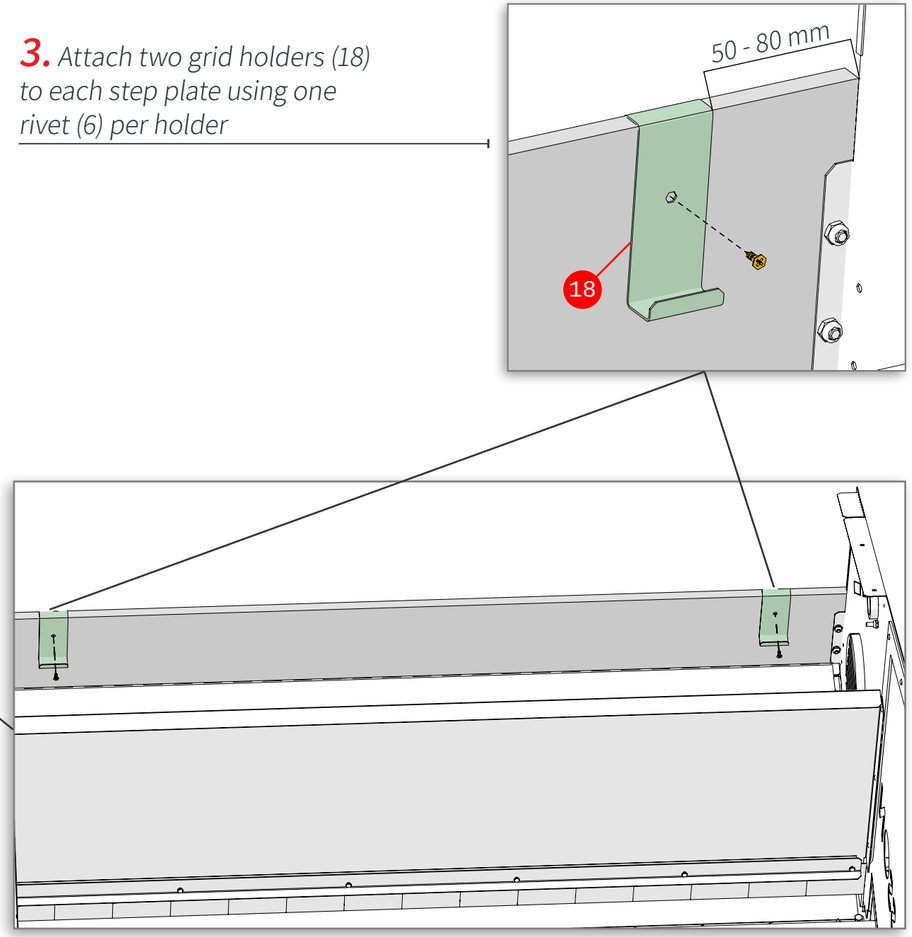

Inside view

4. *Insert the artificial turf grids (23) into the nests*

5. *Verify the grids are securly resting on the grid holders*

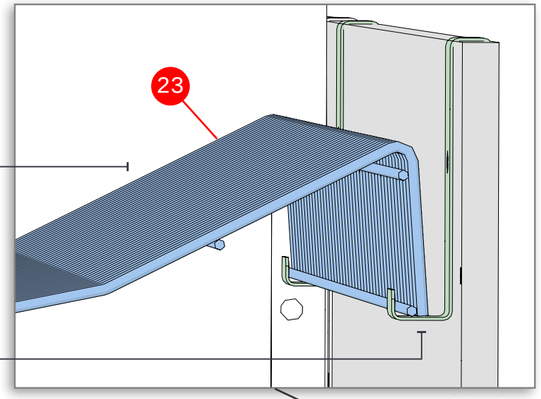

Inside view

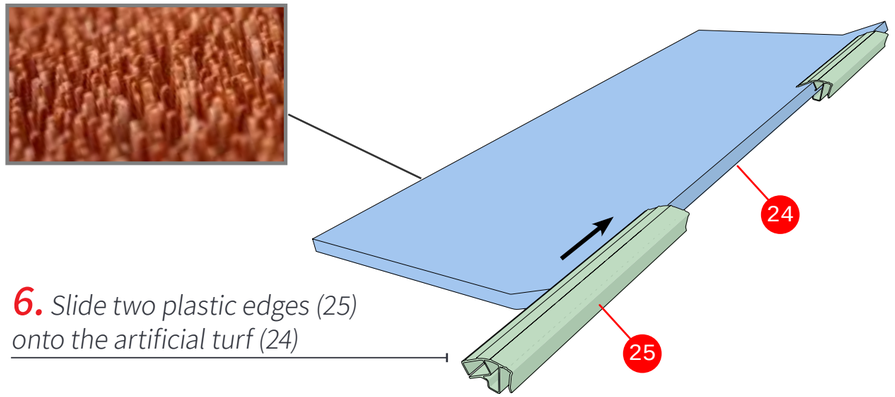

6. *Slide two plastic edges (25) onto the artificial turf (24)*

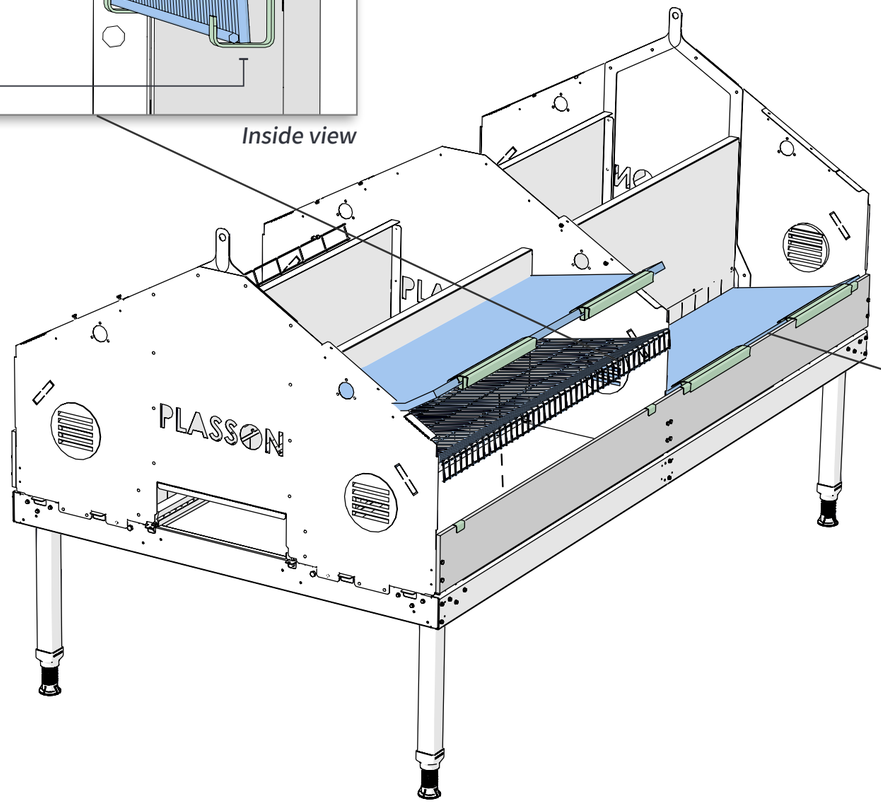

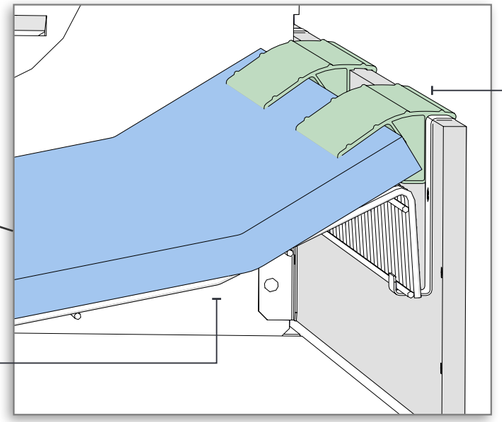

Inside view

7. *Place the artificial turf onto the grids*

8. *Verify the edges snap firmly onto the step plate*

Step 20: Installing the Expulsion Drive Unit

1. *Attach two bearings (12) to each nest side wall using three screws (2) and three nuts (5) per bearing*

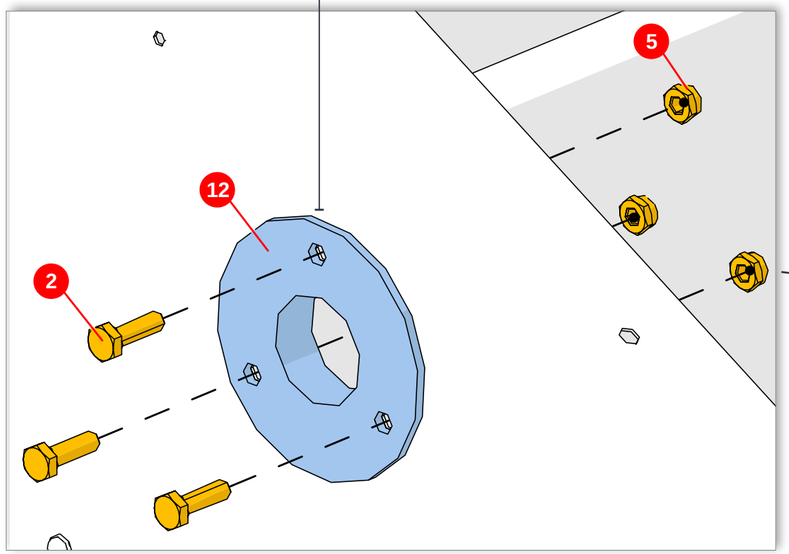

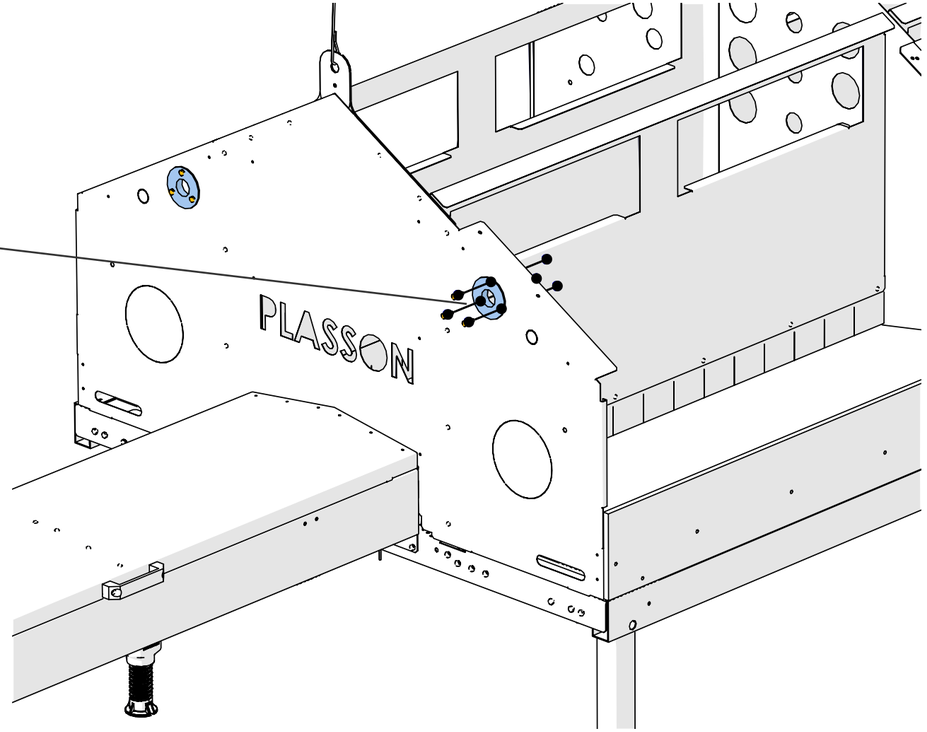

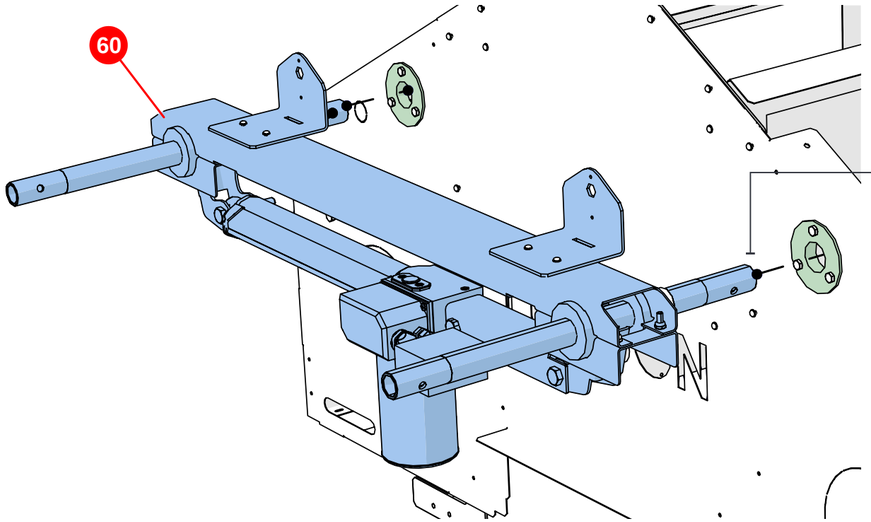

2. *Insert the expulsion drive unit (60) through the bearings in the nest wall*

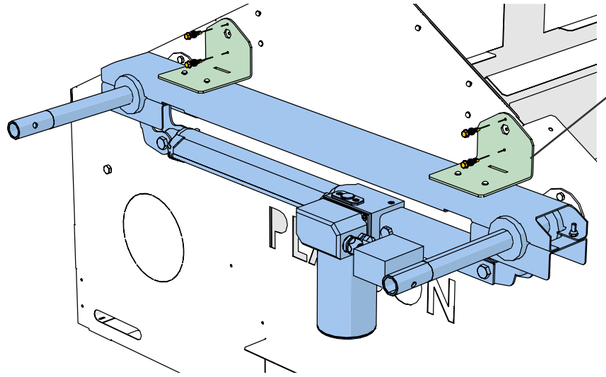

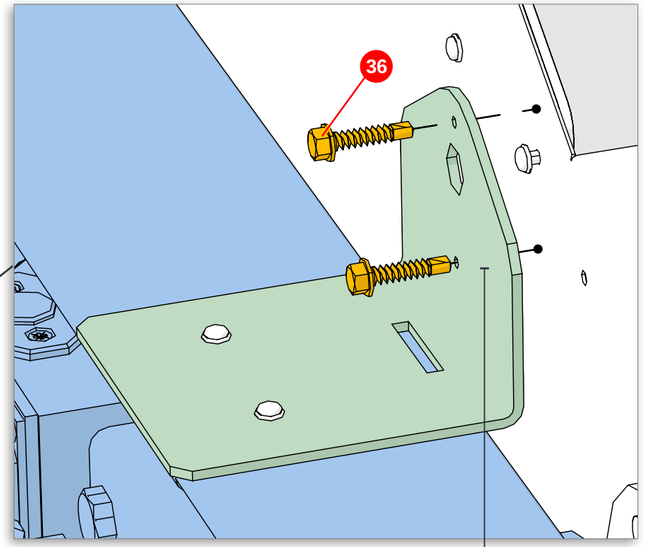

3. *Attach the expulsion drive unit brackets to the nest side wall using two self-drilling screws (36) per bracket*

Step 21: Installing the Expulsion Pipes

1. *Insert the expulsion pipes (62) through the nest houses*

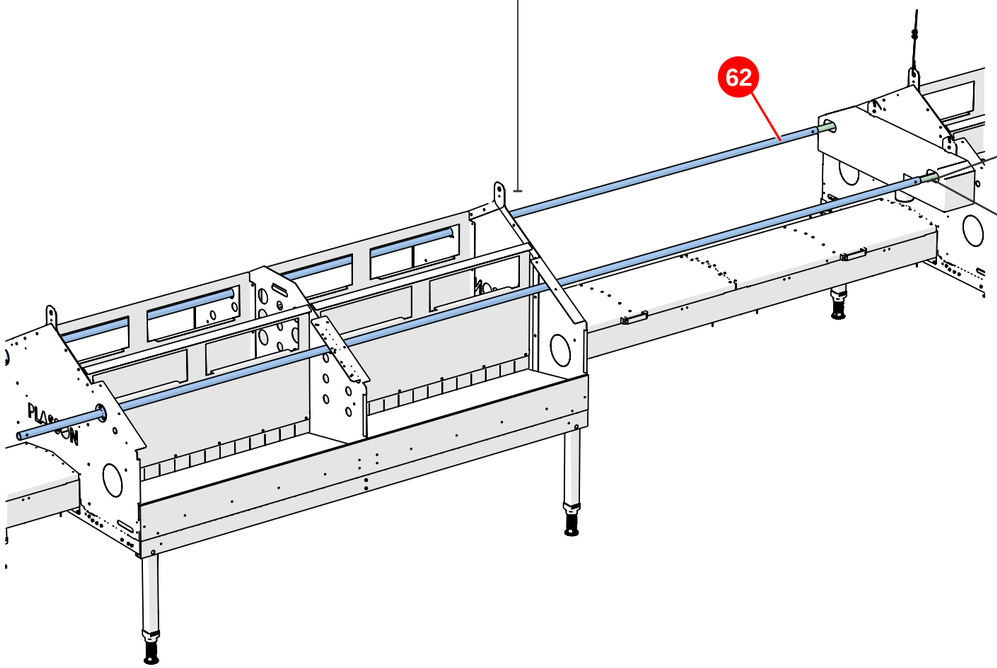

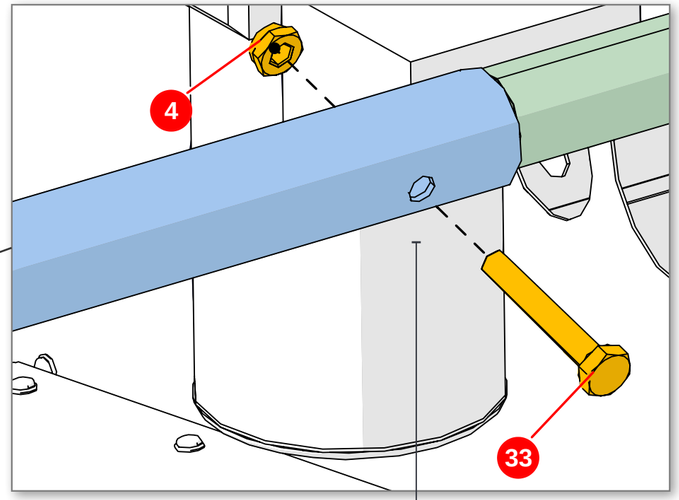

2. *Connect the pipes to the drive unit using a screw (33) and a nut (4)*

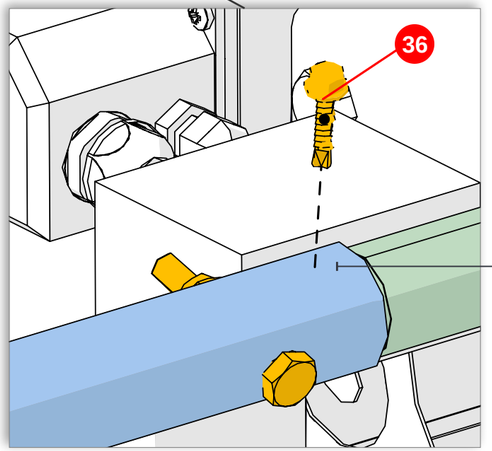

3. *Insert a self-drilling screw (36) into the pipe and drive unit*

Step 22: Installing the Expulsion Grids

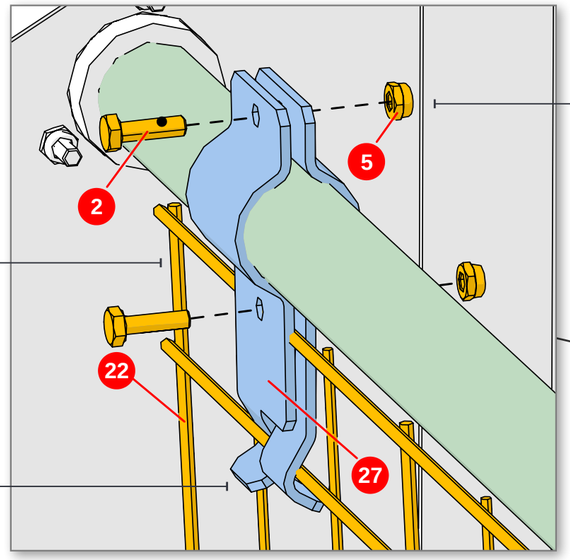

1. *Hold the expulsion grid vertically below the expulsion pipe*

2. *Hook two expulsion grid brackets (27) onto the expulsion grid (22)*

3. *Attach the two brackets together using two screws (2) and two nuts (5)*

NOTE:
Do not fully tighten the screws

4. *Repeat on the other side of the expulsion grid*

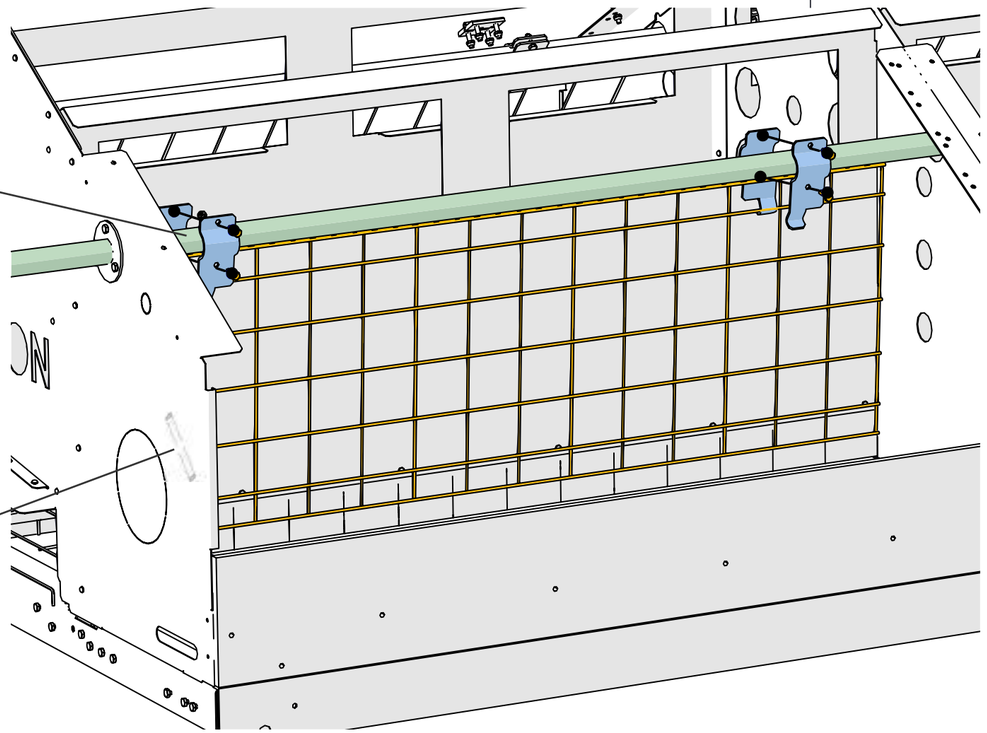

5. *Bend the tabs located on the side and middle walls towards the inside of the nest*

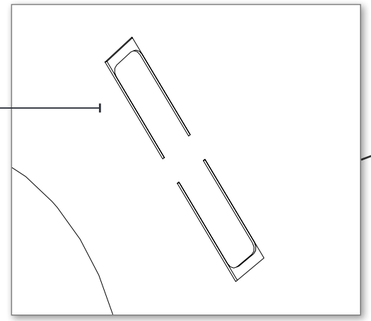

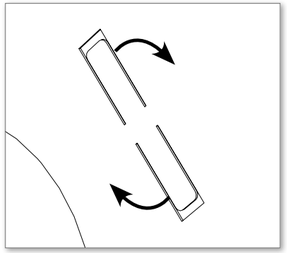

NOTE:
On the middle wall, bend the tabs in opposite directions

Step 23: Calibrating the Expulsion Grids

1. *Move the expulsion drive unit rod to the fully extracted position*

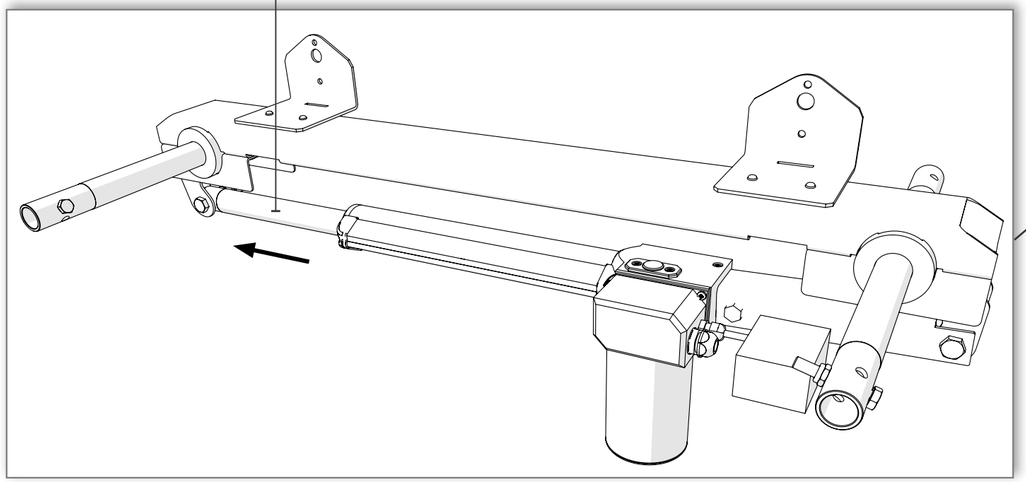

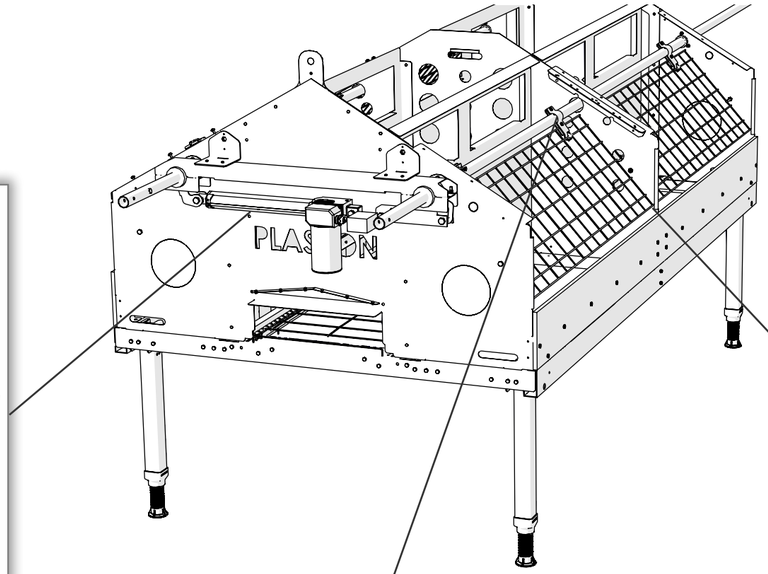

2. *Ensure the expulsion grids are in the closed position*

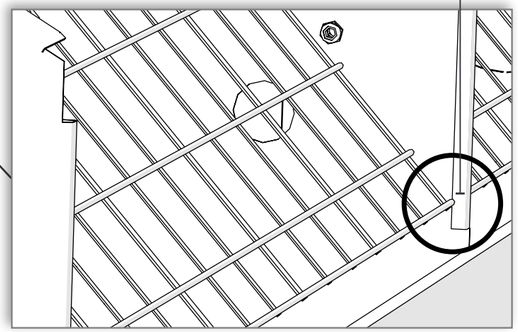

NOTE:
The expulsion grids are in closed position when their bottom edges are in line with the edge of the nest house

3. *Verify activation of the close limit switch*

4. *Tighten the screws on the expulsion grid brackets*

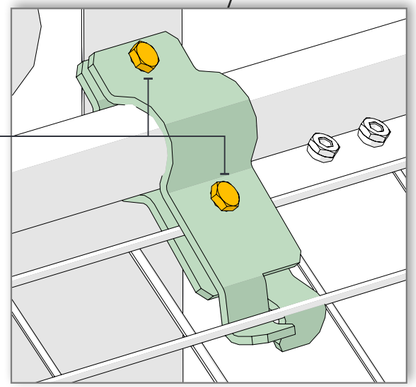

NOTE:
First tighten the lower screw which holds the grid, then tighten the upper screw which holds the pipe

5. *Move the expulsion drive unit rod towards the fully inserted position, until the expulsion grids are vertical*

NOTE:
The expulsion grids are in open position when they are vertical

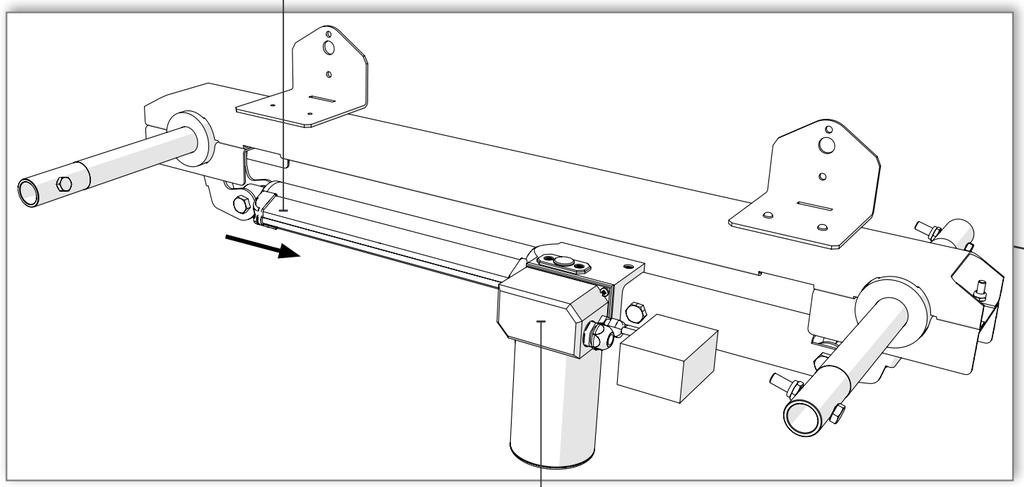

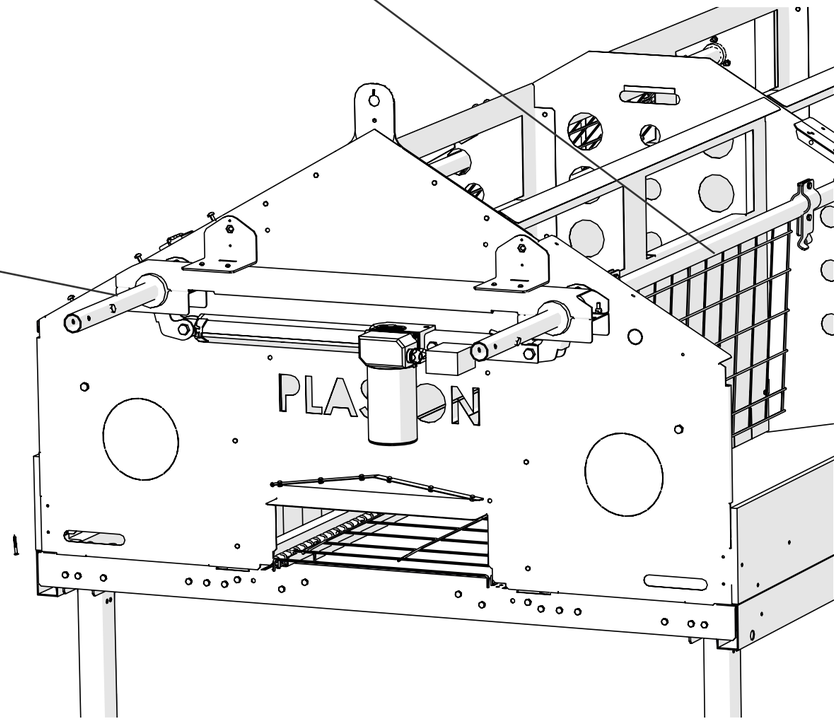

6. *Verify activation of the open limit switch*

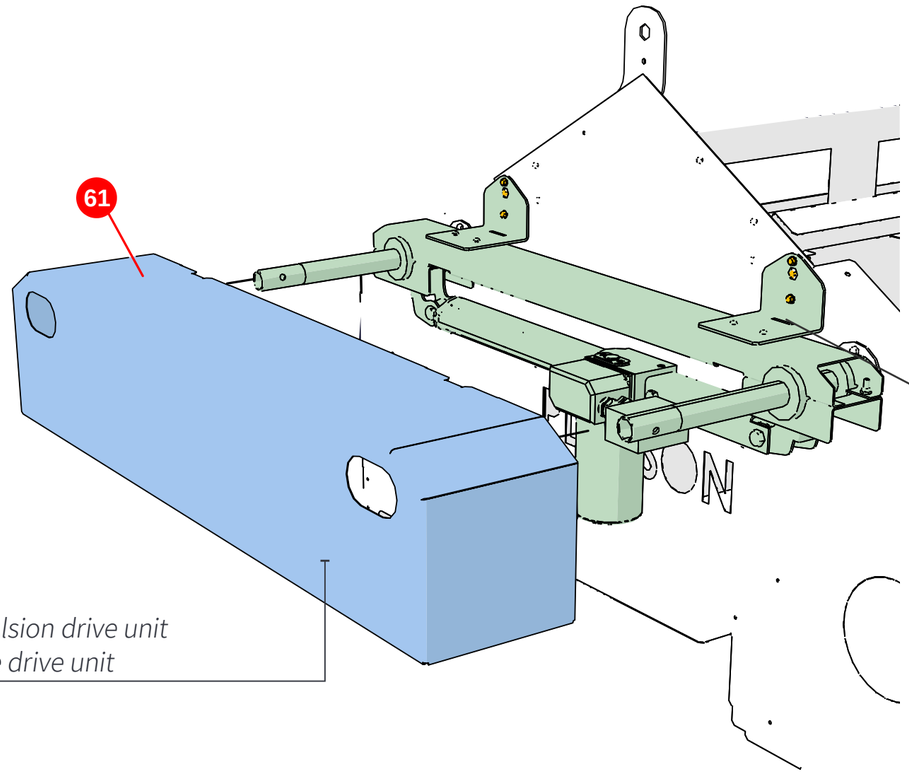

7. Insert the expulsion drive unit cover (61) over the drive unit

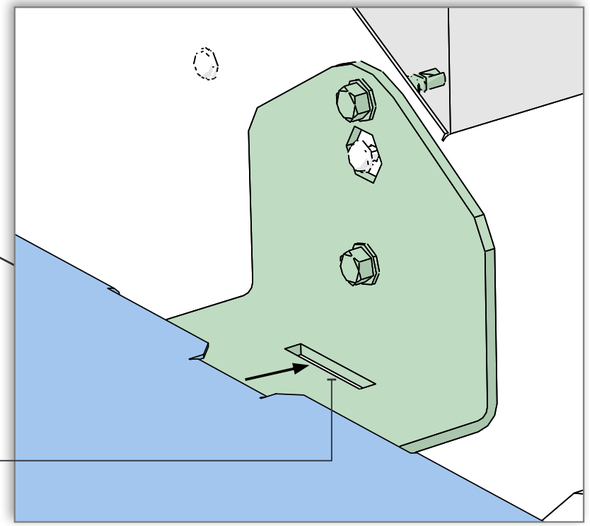

8. Verify that the cover snaps into the expulsion drive unit brackets

Step 24: Assembling the Nest Roofs

1. *Attach the roof assembly (20) to the nest walls using twelve screws (32) and twelve nuts (5)*

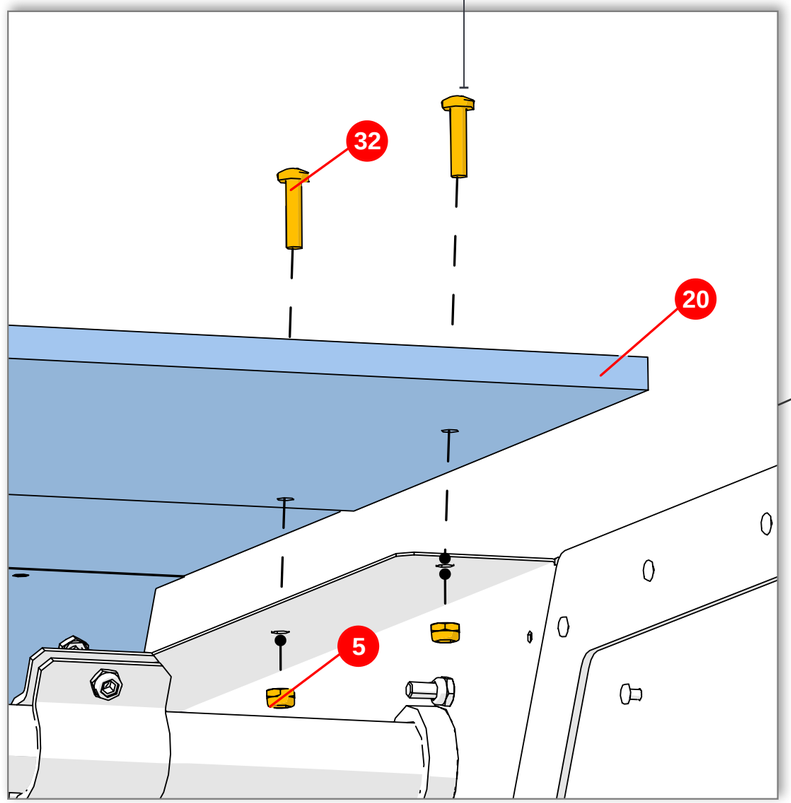

Reverse view

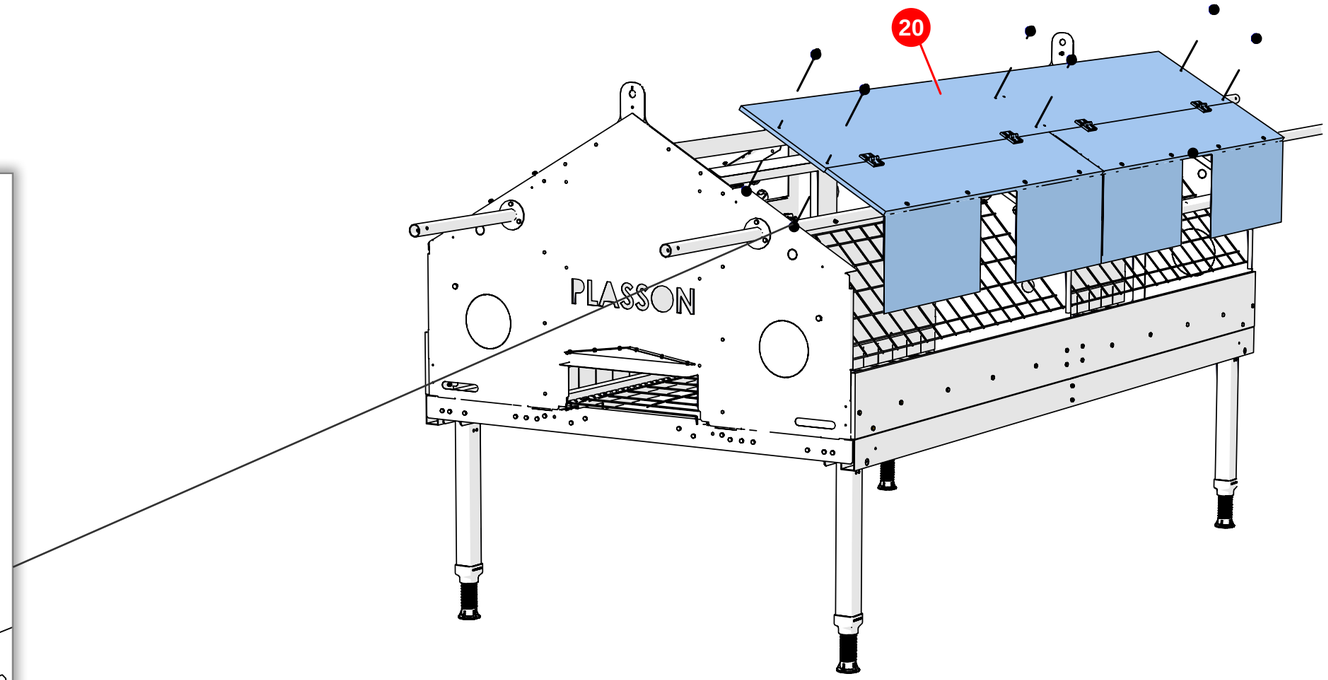

2. *Place the antiperch swing (29) on the roofs (28)*

3. *Place the roofs on the nest*

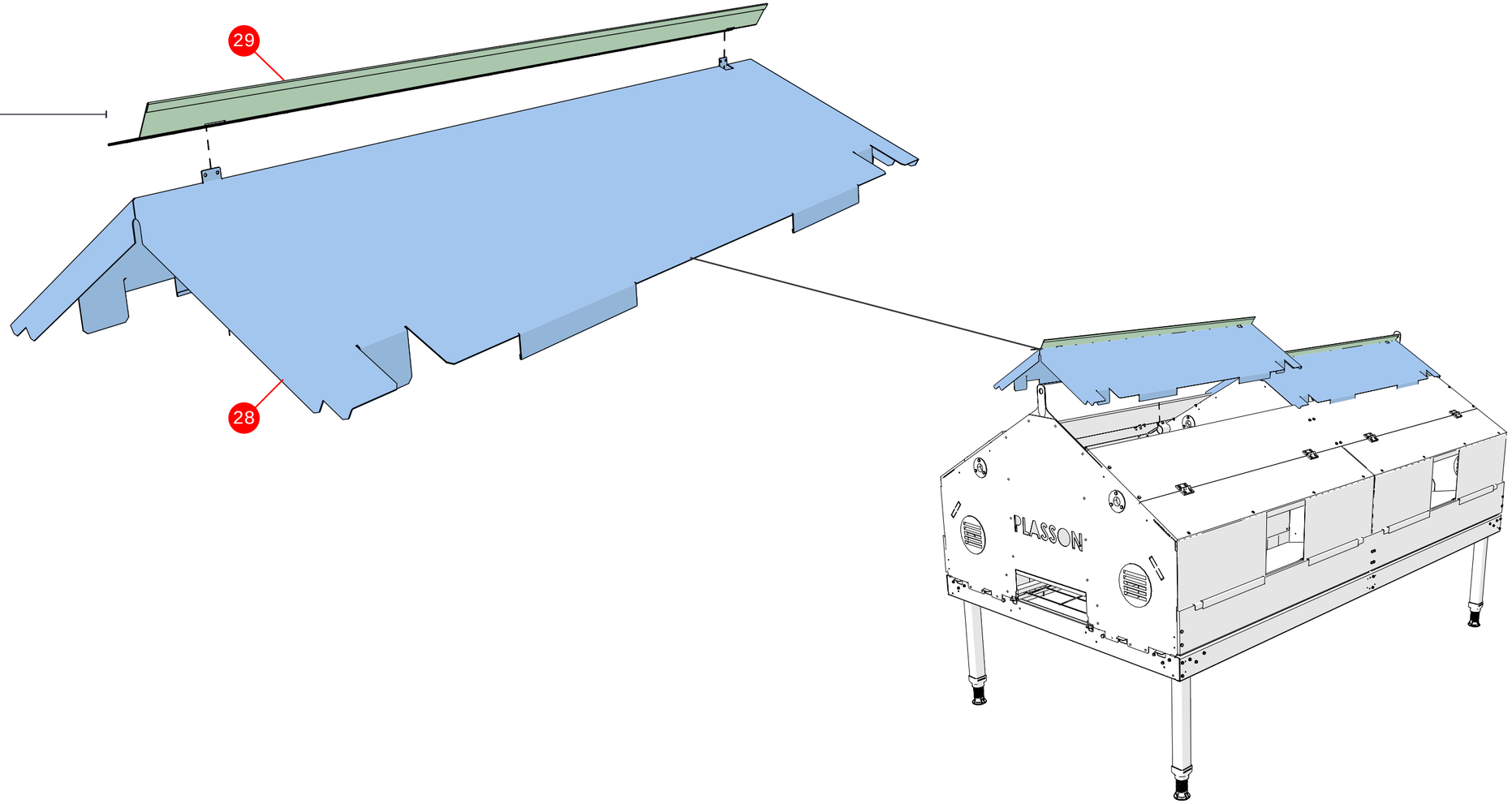

Step 25: Assembling the Benches

1. *Attach the bench beam supports (30) to the nest base using two self-drilling screws (36) per support*

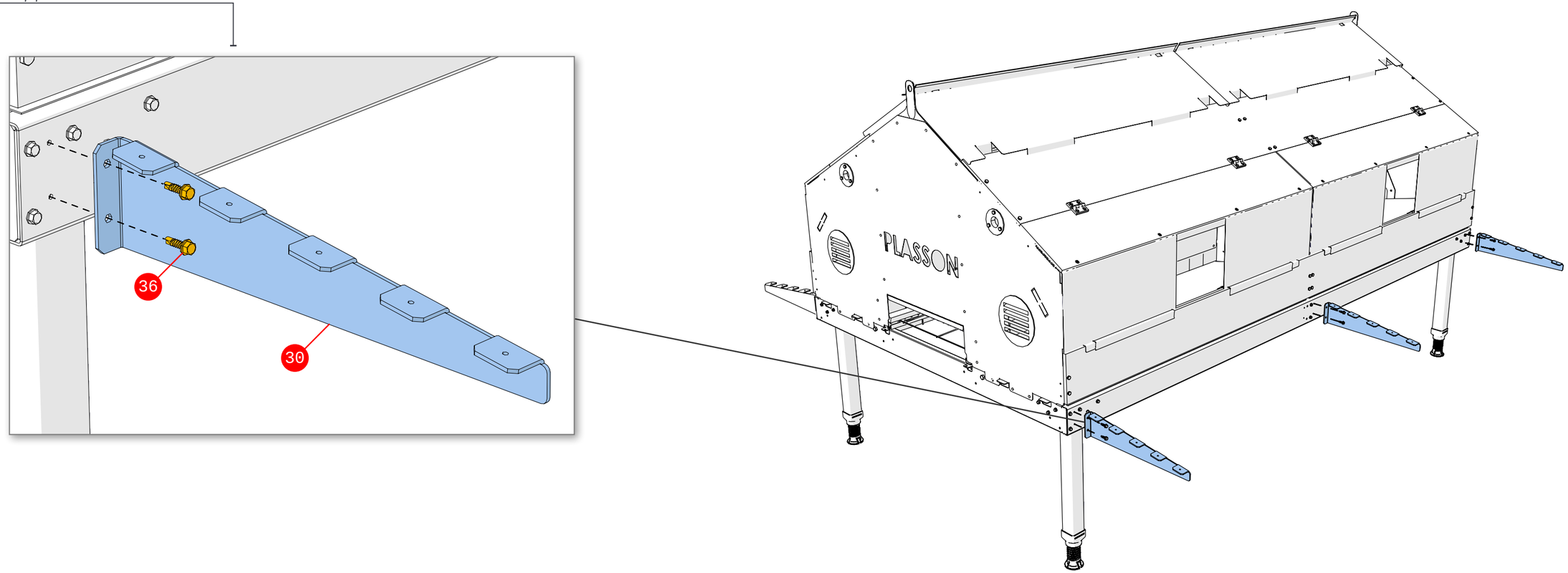

NOTE:
Two nuts are located between the supports and the nest

2. Hook a passage support (37) onto the bench beam support

3. Attach passage beam supports (63, 64) to the nest base using two screws (31) and four nuts (5) per screw

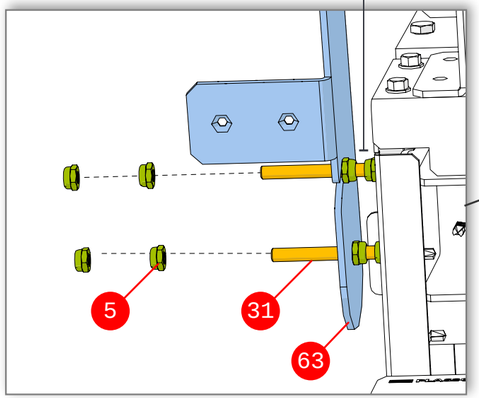

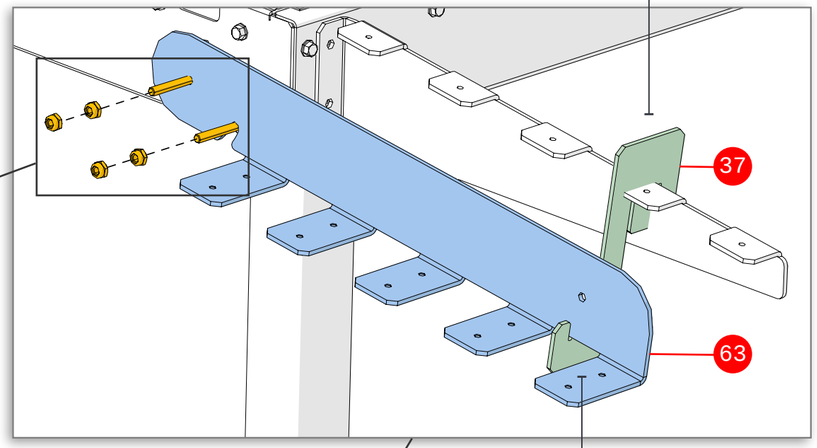

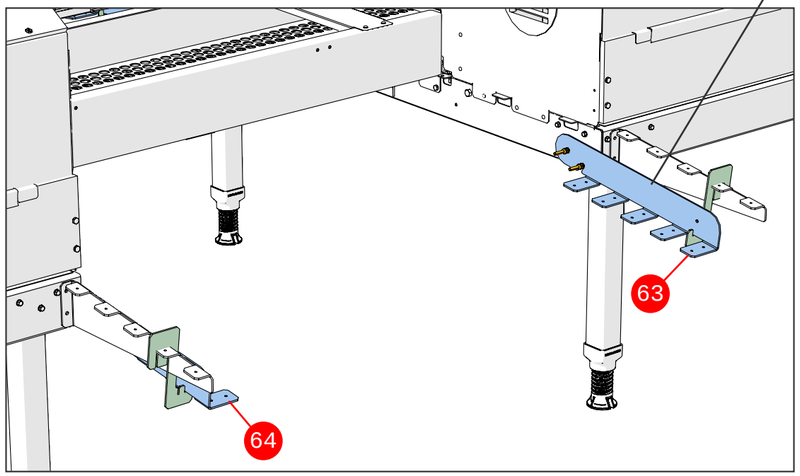

4. Verify that the passage beam support is hooked onto the passage support

5. *Attach five passage beams (65) to the passage beam supports using four wood screws (35) per beam*

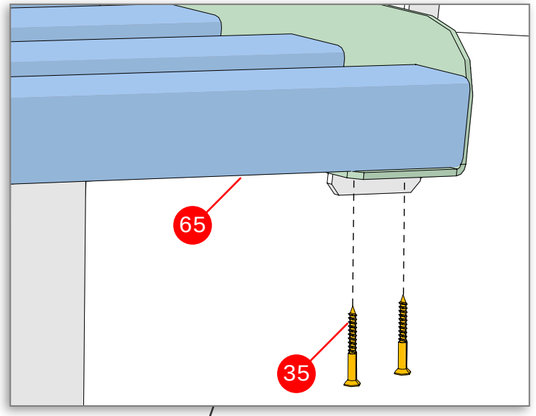

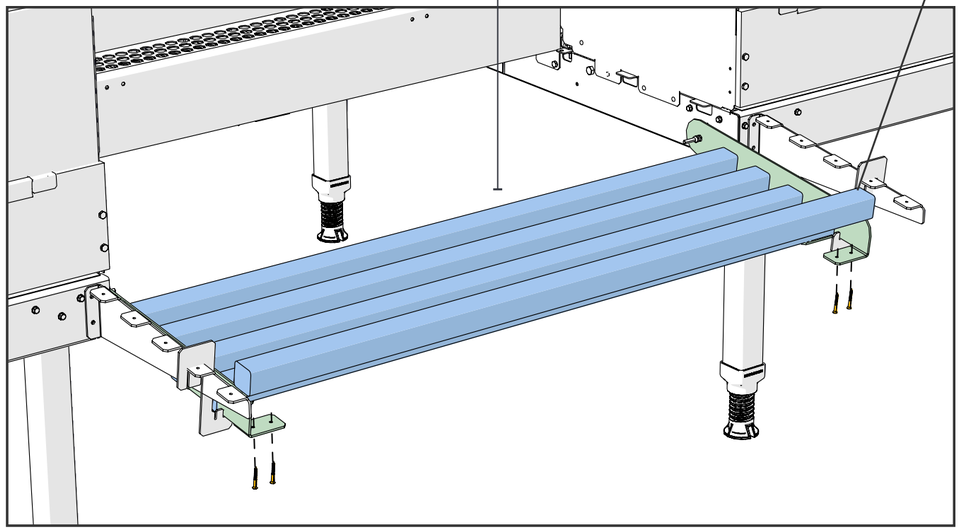

6. *Attach five bench beams (66) to the bench beam supports using three wood screws (35) per beam*

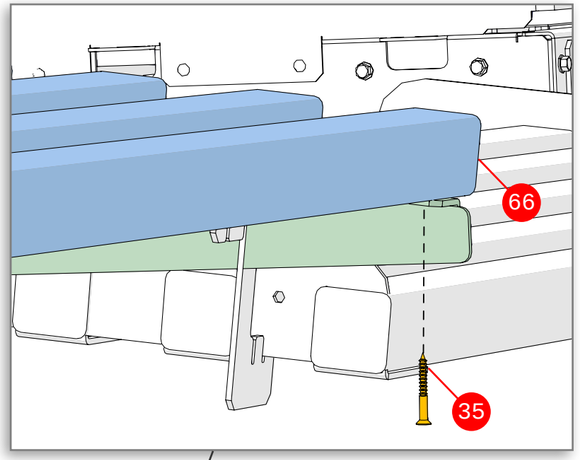

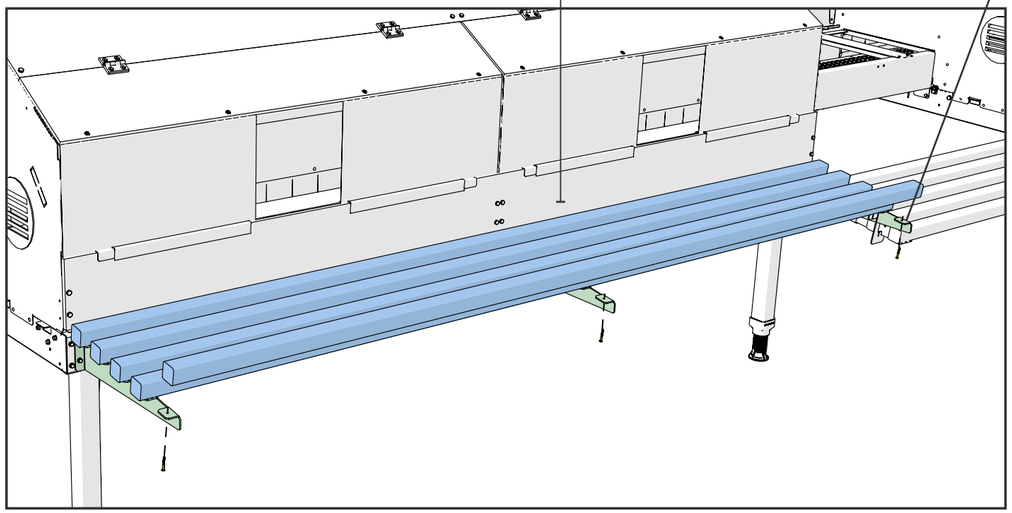

3.4 Power and Control Connections

This section describes the power and control connections and includes:

- Main Power Connection
- Suspension System Drive Unit Connection
- Expulsion System Drive Unit Connection
- Conveyor Belt Drive Unit Connection
- Auto-stop Sensor Check

3.4.1 Main Power Connection

*Connect the facility power supply to the **L**, **N**, and **GND** terminal blocks in section X-0 of the main control cabinet*

Facility power supply

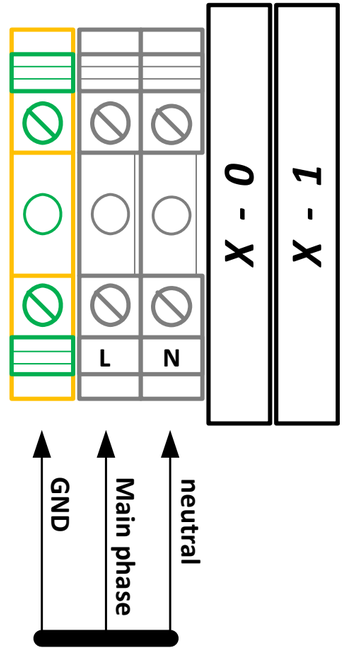

Main supply cable : 3x1.5mm^2

3.4.2 Suspension System Drive Unit Connection

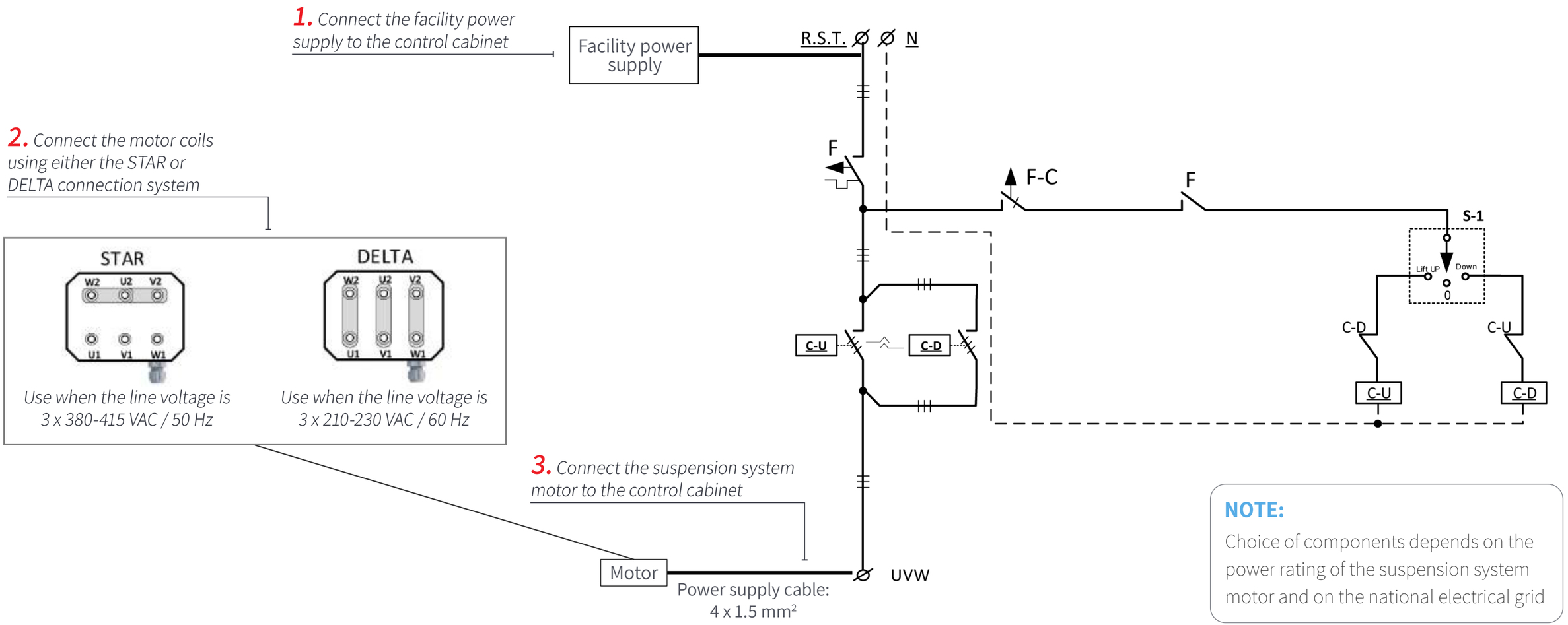

NOTE:
Choice of components depends on the power rating of the suspension system motor and on the national electrical grid

3.4.3 Expulsion System Drive Unit Connection

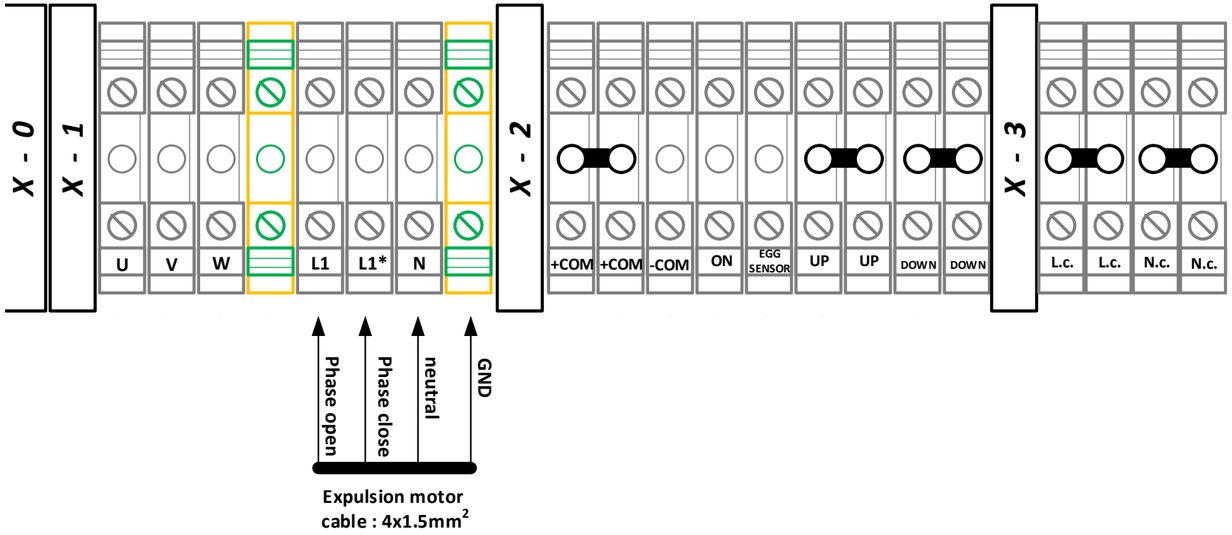

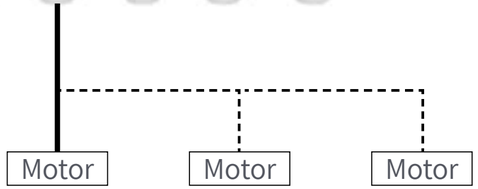

Expulsion actuator
(option up to 3x0.75HP - 1 phase)

*Connect each expulsion actuator motor to the **Phase open**, **Phase close**, **neutral**, and **GND** terminal blocks in section X-1 of the main control cabinet*

3.4.4 Conveyor Belt Drive Unit Connection

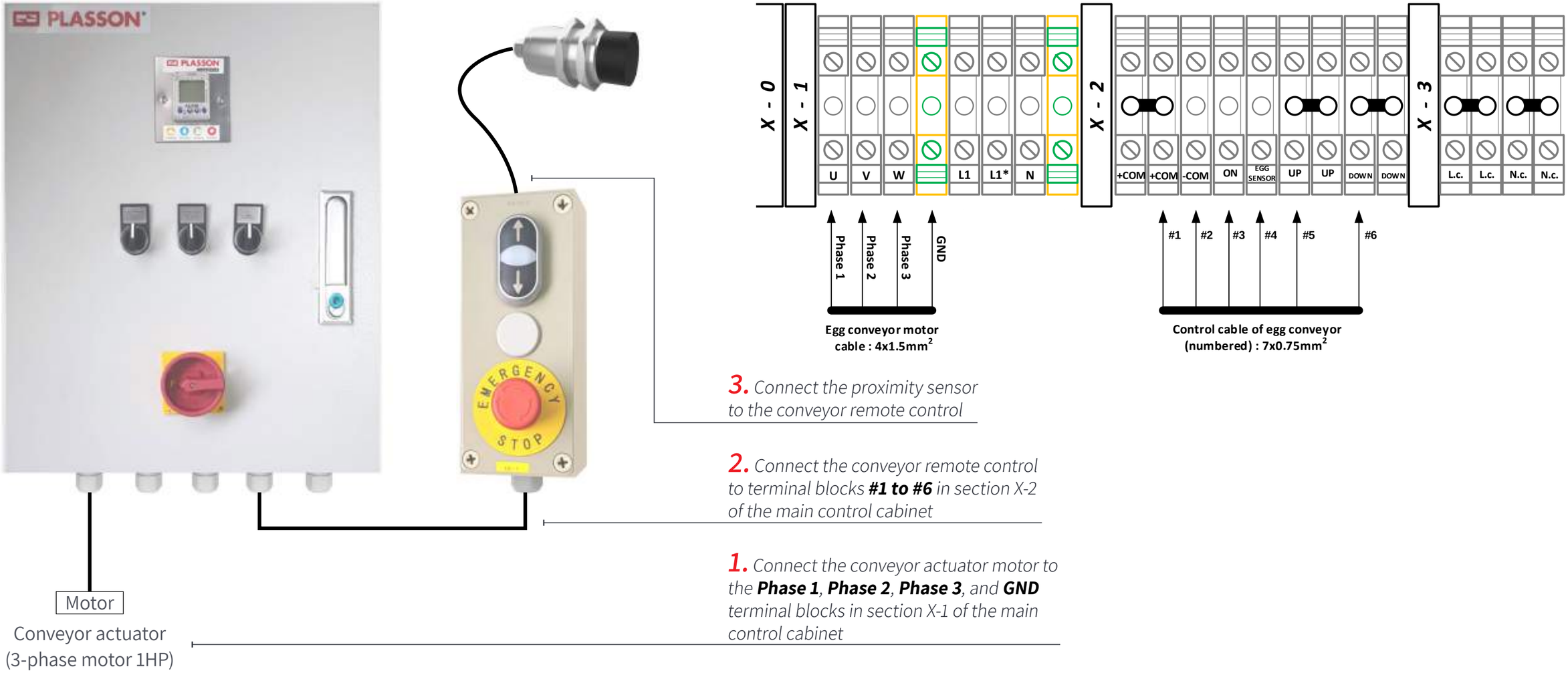

3.4.5 Auto-stop Sensor Check

To check that the auto-stop sensor is functioning properly:

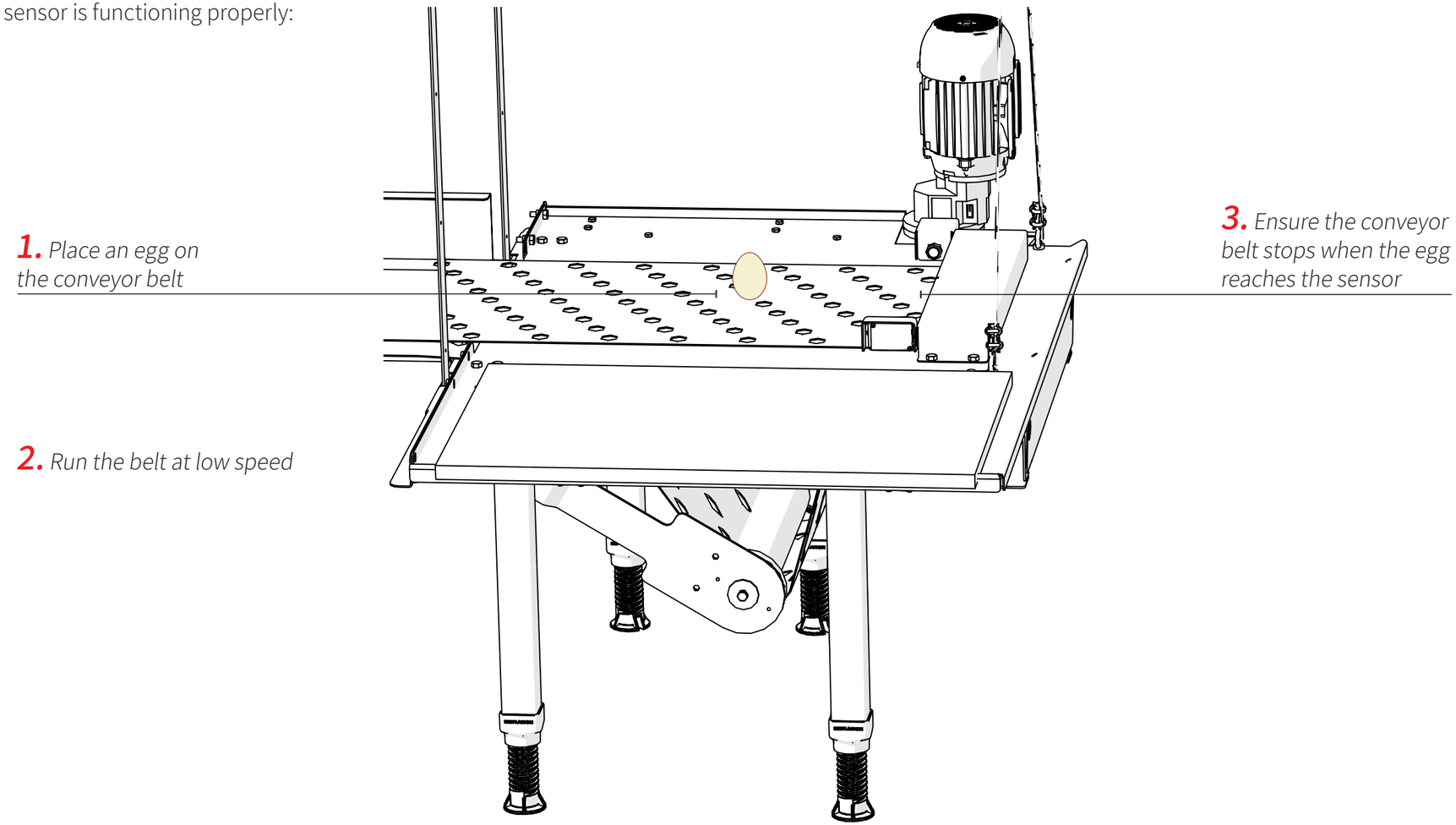

3.5 Nest Opening/Closing Schedule Setup

This section describes programming of the timer which controls the opening and closing of the nest expulsion grids, and includes:

- Timer Overview
- Setting the Time
- Programming Nest Opening/Closing Times
- Locking/Unlocking the Timer
- Manually Opening/Closing Nest

3.5.1 Timer Overview

Main Control Cabinet

Buttons used to access nest opening (P1) and closing (P2) programs

Expulsion grids timer

Buttons used to define nest opening and closing times

3.5.2 Setting the Time

1 Access time setup

Press ⬆ and ⬇ buttons at the same time

2 Set the time

NOTE:
Time is 24-hour format

Press ⬆ and ⬇ buttons to set the time

3 Confirm the time

*Press **P1** button to confirm the time*

3.5.3 Programming Nest Opening/Closing Times

1 Set nest opening start time

*1. Press **P1** button to access the nest opening program*

2. Press ⬆ and ⬇ buttons to set the opening start time

*3. Press **P1** button to confirm*

2 Set nest opening end time

NOTE:
End time should be 3-5 minutes after start time

1. Press ⬆ and ⬇ buttons to set the opening end time

*2. Press **P1** button to confirm*

3 Set nest closing start time

*1. Press **P2** button to access the nest closing program*

2. Press ⬆ and ⬇ buttons to set the closing start time

*3. Press **P2** button to confirm*

4 Set nest closing end time

NOTE:
End time should be 3-5 minutes after start time

1. Press ⬆ and ⬇ buttons to set the closing end time

*2. Press **P2** button to confirm*

3.5.4 Locking/Unlocking the Timer

1 Lock the timer

NOTE:
Timer cannot be operated when locked

1. Press ⬆ button for five seconds

*2. Verify **BLOQ** is displayed*

2 Unlock the timer

1. Press ⬆ button for five seconds

*2. Verify **DESB** is displayed*

3.5.5 Manually Opening/Closing Nest

1 Open nest manually

1. Press ⬇ button for five seconds to enter manual mode

*2. Press **P1** button to open the nest*

3. Press ⬇ button for five seconds to return to automatic mode

2 Close nest manually

1. Press ⬇ button for five seconds to enter manual mode

*2. Press **P2** button to close the nest*

3. Press ⬇ button for five seconds to return to automatic mode

3.6 Bill of Materials (BOM)

The following table displays the list of parts required to assemble a standard section of the system:

ID#	P/N	Description	QTY. Single	QTY. Double
1	02323067	DIN 912 M8X80 ZINC D	8	12
2	02323065	DIN 933 M6X20 SCREW	86	155
3	02323070	DIN 125 M8	8	12
4	02323069	DIN 985 M8 NUT ZINC D	12	28
5	02323068	DIN 985 M6 NUT ZINC D	96	187
6	02323064	POP RIVET SS304 4X10 LARGE HEAD	101	204
7	02371108	PLSNST BASE MIDDLE PROFILE V2	2	
8	02370698	CONNECTION LEG	4	6
9	02371104	PLSNST LONG BEAM V2.1 90X35X20	2	
10	02370721	PLSNST LEG BASE B2600369	4	6
11	02370722	PLSNST PLASTIC SCREW-LEG (B2600370)	4	6
12	02371109	PLSNST SIDE WALL V2	1	
13	02370691	MIDDLE WALL	1	2
14	02371111	PLSNST INNER WALL	1	
15	02370688	PLSNST SIDE WALL SUPPORT	4	6
16	02370790	PLSNST NEST GRILL COVER	4	
17	02371113	PLSNST STEP PLATE V2	2	
18	02371118	PLSNST FLOOR GRID STAND V2	8	
19	02370693	ROOF SUPPORT	2	10
20	02370747	PLSNST ROOF WOODEN ASSEMBLY	2	4
21	02370763	PLSNST SHORT GRID SUPPORT FOR EGG BELT (1143.5 mm)	2	4
22	02370764	EXPULSION GRID	4	8
23	02370765	LOWER GRID ARTIFICIAL TURF	4	8
24	02370027	ARTIFICIAL TURF	4	8
25	02370438	FIXADOR PLAST. TAPPET	6	
26	02370844	PLSNST PASSAGE 1.2m PROFILE	2	
27	02370766	EXPULSION GRID BRACKET	16	32
28	02370682	PLSNST ROOF	2	4
29	02371042	PLSNST ANTIPERCH SWING	2	
30	02371121	PLSNST BEAM SUPPORT V0.5	6	
31	02323066	DIN 933 M6X55 SCREW ZINK PLATED	8	
32	02323226	DIN 7985 M6 x 25 SCREW ZINC D	16	32
33	02323037	DIN 933 M8X50 SCREW ZINC D	4	4

ID#	P/N	Description	QTY. Single	QTY. Double
34	02323227	DIN 913 M8 x 80 ZINC D	2	6
35	02323038	WOOD SCREW, 4X35, ZINC D, DIN 7997	30	50
36	02310027	Self Drilling - Hex Washer Head 1/4"-3/4"	4	12
37	02371147	PLSNST PASSAGE BENCH SUPPORT	4	
38	02371122	PLSNST SIDEWALL BRACKET FOR ENTRANCE PLATE	3	
39	02371124	PLSNST LEG SET	2	
40	02370700	PLSNST SINGLE NEST UNIT BASIC	1	N/A
41	02370858	PLSNST SINGLE BASE SET	1	N/A
42	02370699	BASE WELDED ASSY	1	N/A
43	02370933	PLSNST BREEDERS SINGLE NEST WOOD SUPPORT KIT	1	N/A
44	02370862	PLSNST WOOD PROFILE 40X40 FOR SINGLE NEST (2440 mm)	10	N/A
45	02370850	PLSNST LONG NEST UNIT "BASIC"	N/A	1
46	02370851	PLSNST LONG NEST BASE WITH LEGS	N/A	1
47	02370753	LONG WELD BASE	N/A	1
48	02370668	PLSNST DOUBLE UNIT MIDDLE SUPPORT	N/A	1
49	02370748	SIDE STEP BRACKET	N/A	2

ID#	P/N	Description	QTY. Single	QTY. Double
50	02370970	PLSNST BREEDERS DOUBLE NEST WOOD SUPPORT KIT	N/A	1
51	02370861	PLSNST WOOD PROFILE 40X40 FOR DOUBLE NEST (4872 mm)	N/A	10
52	02323212	DIN 965 ZINC D M6X25 SCREW		
53	02370746	SUSPENSION PIPE BEARING		
54	02323071	SUSPENSION PIPE		
55	02370927	PLSNST SUSPENSION PIPE ADAPTER KIT		
56	02323234	DIN 933 M10X100 (10.9) SCREW ZINC D		
57	02382424	DIN 985 M10 NUT ZINC D		
58	02370792	EGG BELT	1	1
59	02370667	PLSNST HINGE	2	4
60	02370899	EXPULSION MOTOR	1	1
61	02370924	EXPULSION MOTOR COVER	1	1
62	02323072	EXPULSION PIPE		
63	02370686	PASSAGE BEAM SUPPORT –R		
64	02370689	PASSAGE BEAM SUPPORT –L		
65	02370971	PLSNS WOOD PROFILE FOR 1.2M PASSAGE (1166 MM)	20	

ID#	P/N	Description	QTY. Single	QTY. Double
66	02370862	PLSNST WOOD PROFILE 40X40 FOR SINGLE NEST (2440mm)	40	
67	02320076	DIN 933 M8X35 SCREW ZINC D		
68	02310431	DIN 315 M8 WING NUT		
69	02323233	DIN 933 M8X20 SCREW		
70	02370962	PLSNST COLLECTION TABLE ADAPTER TO PASSAGE	1	1
71	02323039	THIMBLE FOR 6MM CABLE		
72	02370666	PLSNST HANDLE	1	2
73	02370813	PLSNST EGGS BELT CONNECTION STRIP	12	12
74	02323232	DIN 933 M8X16 SCREW		
75	02370966	PLSNST COLLECTION TABLE SAFETY COVER	1	1
76	02370878	PLSNST PASSAGE COVER FOR 1.5m	1	
77	02370702	PASSAGE SUPPORT	4	6
78		Nest lifting drive unit plate		
79		Chain coupler		
80		Nest suspension drive unit	1	1
81		Collection table motor	1	1

ID#	P/N	Description	QTY. Single	QTY. Double
82		Conveyor belt end unit	1	1
83	02371105	PLSNST SHORT BEAM	3	
84	02371104	PLSNST LONG BEAM V2.1 90X35X20	2	

4. Operation Instructions

This chapter reviews the tasks associated with first-time operation of the system after installation and includes:

- Lowering the Nests to the Floor
- Running the Egg Collection Conveyor Belt

4.1 Lowering the Nests to the Floor

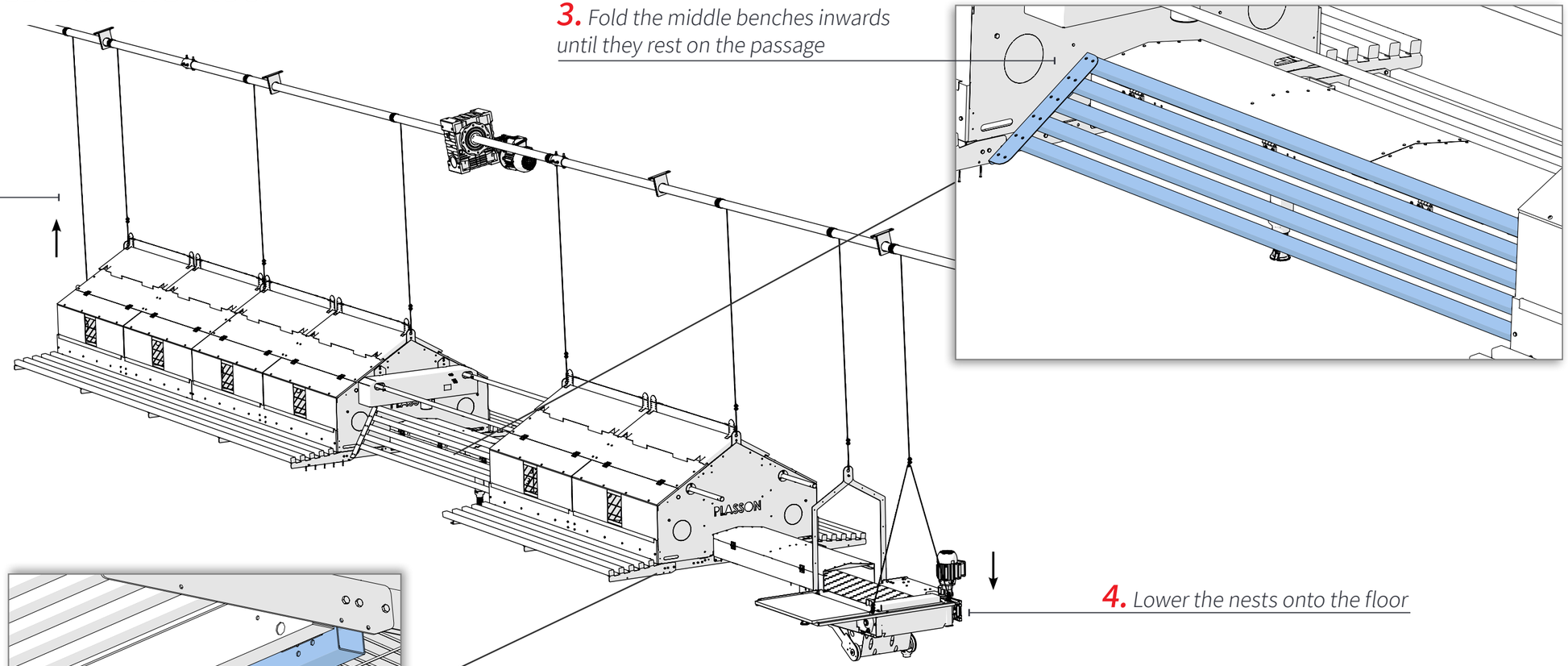

1. *Lift the nests to a comfortable height using the suspension system control panel*

2. *Fold the legs up toward the bottom of the nests*

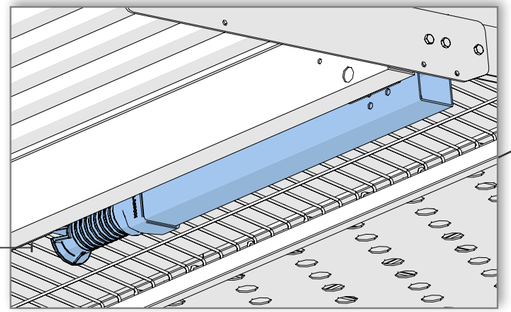

Bottom view

3. *Fold the middle benches inwards until they rest on the passage*

4. *Lower the nests onto the floor*

⚠ CAUTION

The suspension system is controlled manually and does not have an automatic stop. Keep eye contact with the system at all times while operating the suspension mechanism

4.2 Running the Egg Collection Conveyor Belt

1. *Push the up/down buttons on the remote to speed up/ slow down the conveyor belt*

2. *Open the control cabinet and locate the frequency converter*

3. *Verify that the number on the frequency converter does not exceed 50 Hz*

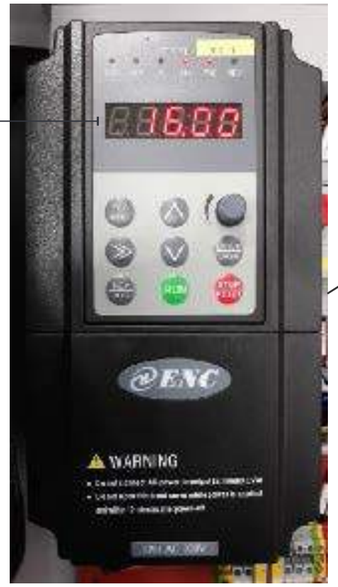

NOTE:
The frequency converter box is located inside the control cabinet

Revision History

Revision	Date	Description	Approval
A		Initial release	Shaul S.

PLASSON® Livestock

Feeding Drinking Climate Housing

Plasson Livestock
Maagan Michael, D.N. Menashe
3780500 Israel

info@plassonlivestock.com

+972-73-2413001

https://www.plassonlivestock.com

Thank you!

Copyright © 2022 Plasson, all rights reserved. No part of this publication may be reproduced, transmitted, transcribed, stored in a retrieval system, or translated into any language or computer language, in any form or by any means, electronic, mechanical or otherwise without prior written permission of Plasson.

Rev B | Doc P/N: 080205034E